No. PE-C240PKJ-1B

TCM®

PARTS MANUAL

DIESEL ENGINE

C240PKJ
C240PKJ-06
C240PKJ-11
C240PKJ-12
C240PKJ-17
C240PKJ-20

ISUZU

TCM CORPORATION

ご使用のまえに

このパーツカタログは，TCM フォークリフト のエンジンの構成部品を収録しています。

部品ご注文について

部品ご注文の際は，必ず車両の形式・製造番号（号車），エンジンの形式・製造番号（号機），部品番号および注文数を明示してください。車両の製造番号（号車）は車両銘板に，エンジンの製造番号（号機）は，シリンダブロックに打刻で表示しています。

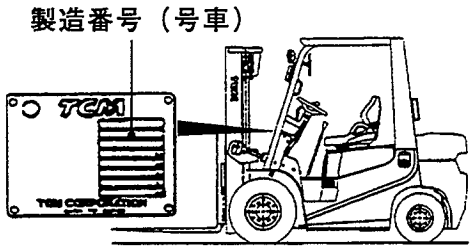

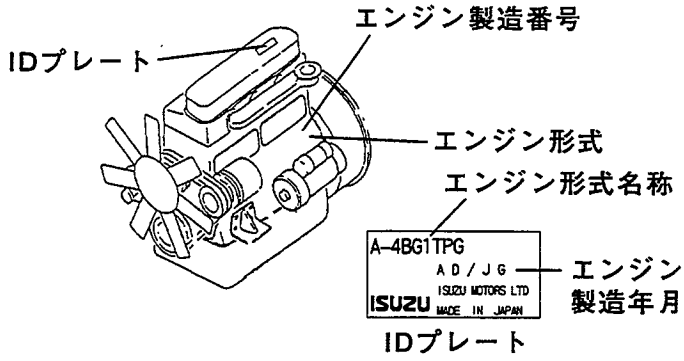

ご使用について

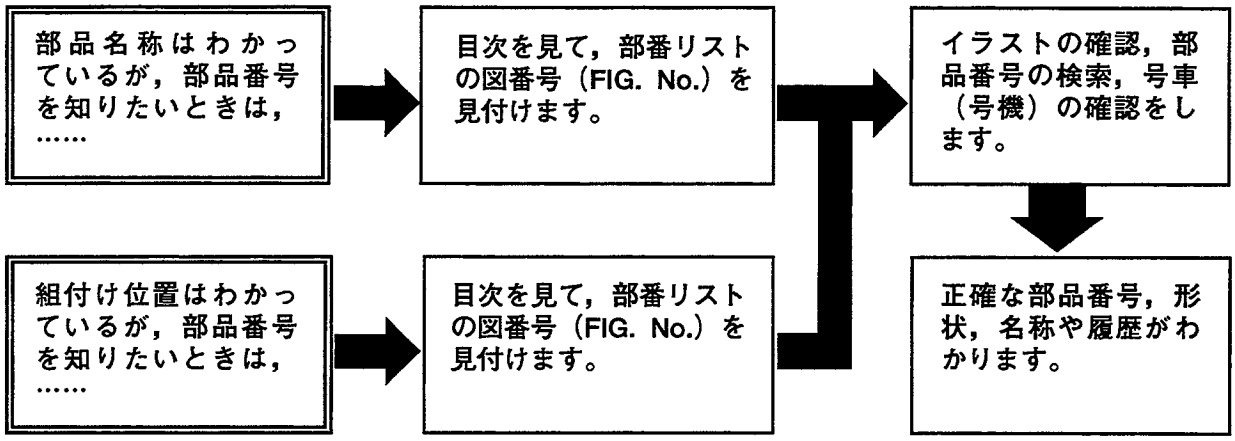

略語および記号

ASSY	組立品を示します。	OP	選択装備品を示します。
O. S.	オーバサイズ仕様部品を示します。	LH	フライホイール側から見て左側を示します。
U. S.	アンダサイズ部品を示します。	RH	フライホイール側から見て右側を示します。
STD	標準装備品を示します。	t	厚みを示します。
*	セットおよびキットの販売部品を示します。	z	歯数を示します。
AR	必要に応じた数を使用します。	GRD	シリンダボディとライナの締め代グレードおよびライナとピストンのすき間グレードを示します。
L	長さを示します。		
#	単体販売しません。		
＋	図示していません。		

部品は，品質向上のため予告なく変更することがありますので，あらかじめご了承ください。

INTRODUCTION

This Parts Catalogue contains the component parts of the engine mounted on **TCM FORKLIFT TRUCK**.

How to order parts

When ordering, be sure to specify the model name and serial number (machine number), engine type and serial number (engine number) of your machine, as well as the part number and desired quantity for each part. The machine serial number (machine number) is indicated on the machine name plate, the engine serial number (engine number) is punched on the cylinder block.

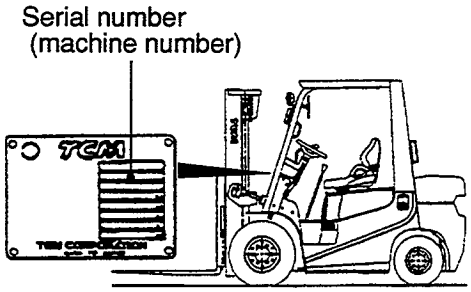

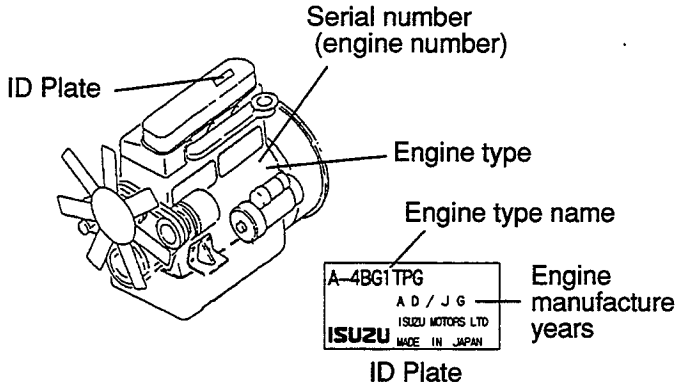

How to use the Parts Catalogue

To find a part number after understanding the part name. → Search the section from Contents, find the FIG. number of the parts number list. → Confirm illustration part number and machine number. → The part number, shape, name and record are clear.

To find a part number after understanding the location of assembly → Search the Contents, find the FIG. number of illustration. → Confirm illustration part number and machine number. → The part number, shape, name and record are clear.

Abbreviations and symbols

ASSY ···	Assembled unit.
O.S. ·····	Oversize.
U.S. ·····	Undersize.
STD ·····	Standard.
* ·····	The marketable part set or kit.
AR ·····	Quantity required.
L ·····	Length.
# ·····	Not sold separately.
+ ·····	Not illustrated.
OP ·····	Optional parts.
LH ·····	Right-hand side as viewed from the flywheel side.
RH ·····	Left-hand side as viewed from the flywheel side.
t ·····	Thickness.
z ·····	Number of teech on the gear.
GRD·····	The grade of the tighetening allowance between a cylinder body and a liner and the grade of the clearance between a liner and a piston are shown. For parts replacement procedures, refer to the Shop Manual.

Materals and specifications subject to change without notice.

APPLICABLE MODEL
適用機種

TYPE	ENGINE TYPE	APPLICABLE MODEL			
A	C240PKJ	STD	FD15C9H FD15T9H FD18C9H FD18T9H	FD20C6 FD20T6 FD25C6 FD25T6	FD30C6 FD30T6
B	C240PKJ-06	EXN	FD15C9H FD15T9H FD18C9H FD18T9H	FD20T6 FD25T6 FD30T6	
C	C240PKJ-11	OC	FD15W9H FD18W9H	FD20W6 FD25W6	FD30W6
D	C240PKJ-12	EXR	FD10T9EXR FD15T9EXR FD18T9EXR	FD20T6EXR FD25T6EXR FD30T6EXR	
E	C240PKJ-17	EXA	FD15C9H FD15T9H FD18C9H FD18T9H	FD20C6 FD20T6 FD25C6 FD25T6	FD30C6 FD30T6
F	C240PKJ-20	EXE	FD15C9H FD15T9H FD18C9H FD18T9H	FD20T6 FD25T6 FD30T6	

CONTENTS
目　　次

A: C240PKJ　D: C240PKJ-12
B: C240PKJ-06　E: C240PKJ-17
C: C240PKJ-11　F: C240PKJ-20

SECTION	部　門	FIG.No. 図番号
ENGINE BODY	エンジン本体	
CYLINDER BLOCK	シリンダブロック	1
PISTON,CRANKSHAFT & FLYWHEEL	ピストン，クランクシャフト＆フライホイール	2
TIMING GEAR & CASE	タイミングギヤー＆ケース	3
OIL PAN	オイルパン	4
FLYWHEEL HOUSING	フライホイールハウジング	5
HEAD & VALVE MECHANISM	ヘッド＆バルブメカニズム	
CYLINDER HEAD	シリンダヘッド	6
VALVE MECHANISM	バルブメカニズム	7
INLET & EXHAUST SYSTEM	インレット＆エキゾースト	
AIR INTAKE & EXHAUST SYSTEM (A,B,C,E,F)	エアーインテーク＆エキゾーストシステム	8
AIR INTAKE & EXHAUST SYSTEM (D)	エアーインテーク＆エキゾーストシステム	9
THROTTLE VALVE (D)	スロットルバルブ	10
INTAKE SHUTTER (D)	インテークシャッタ	11
LUBRICATION SYSTEM	潤滑装置	
OIL PUMP	オイルポンプ	12
OIL FILTER	オイルフィルタ	13
OIL PIPE	オイルパイプ	14
COOLING SYSTEM	冷却装置	
COOLING SYSTEM	クーリングシステム	15
FUEL SYSTEM	燃料装置	
FUEL SYSTEM (A,B,C,E,F)	フューエルシステム	16
FUEL SYSTEM (D)	フューエルシステム	17
NOZZLE	ノズル	18
INJECTION PUMP (1/2)(A,B,C,E,F)	インジェクションポンプ	19
INJECTION PUMP (2/2)(A,B,C,E,F)	インジェクションポンプ	20
INJECTION PUMP (D)	インジェクションポンプ	21
GOVERNOR (INNER PARTS)(D)	ガバナ（インナパーツ）	22
FEED PUMP (D)	フィードポンプ	23
FUEL FILTER (A,B,C,F)	フューエルフィルタ	24
FUEL FILTER (D)	フューエルフィルタ	25
FUEL FILTER (E)	フューエルフィルタ	26
ELECTRICAL PARTS	エレクトリカルパーツ	
STARTER,GENERATOR & ELECTRICAL PARTS	スタータ，ジェネレータ＆エレクトリカルパーツ	27
STARTER (INNER PARTS)(A,B,E,F)	スタータ（インナパーツ）	28
STARTER (INNER PARTS)(C)	スタータ（インナパーツ）	29
STARTER (INNER PARTS)(D)	スタータ（インナパーツ）	30
GENERATOR (INNER PARTS)(A,C,D,E,F)	ジェネレータ（インナパーツ）	31
GENERATOR (INNER PARTS)(B)	ジェネレータ（インナパーツ）	32
PARTS NUMBER INDEX	部品番号順索引表	1～5

FIG. 1 CYLINDER BLOCK
シリンダブロック

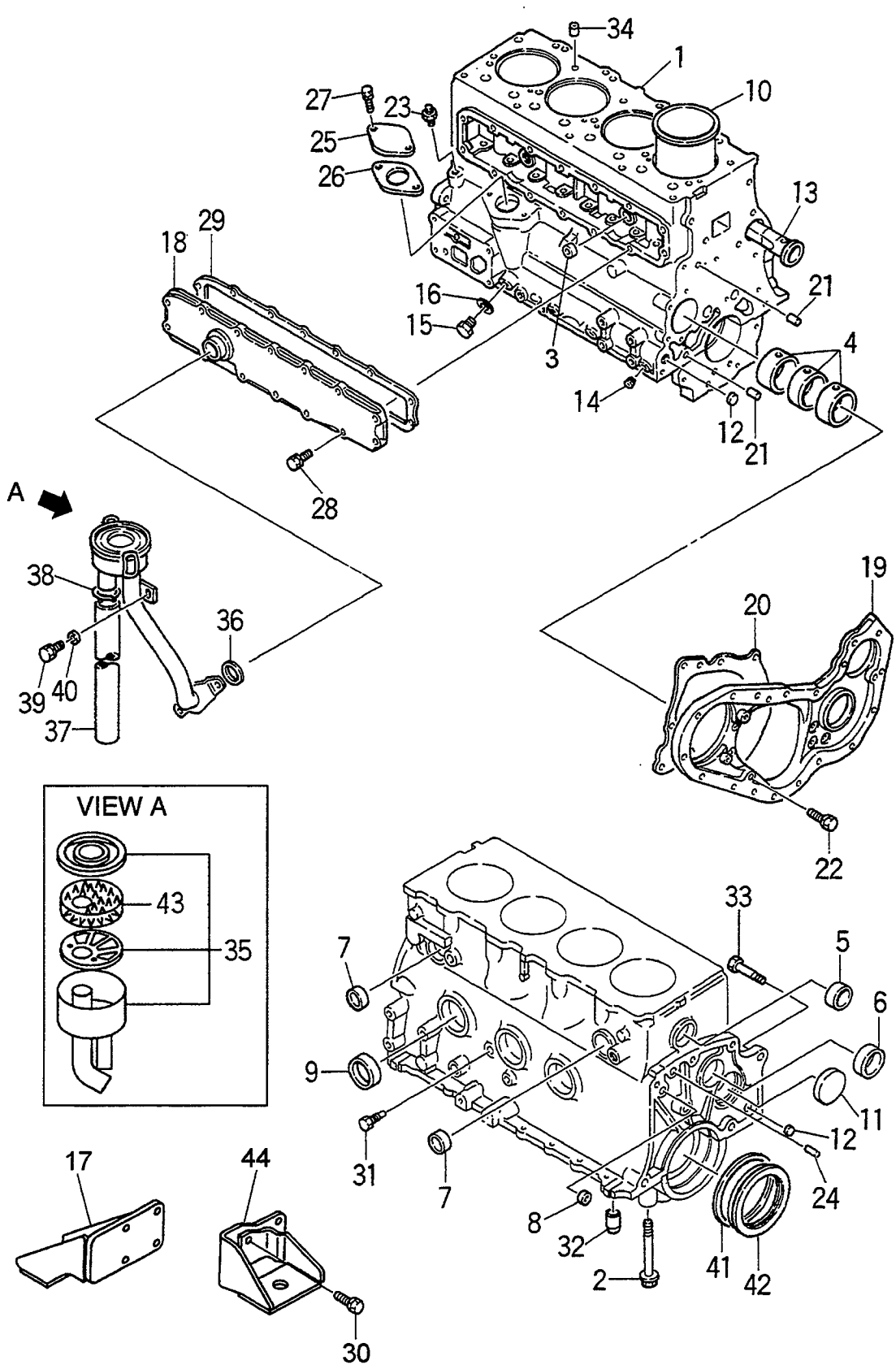

FIG. 1

A: C240PKJ D: C240PKJ-12
B: C240PKJ-06 E: C240PKJ-17
C: C240PKJ-11 F: C240PKJ-20

Item No. 見出番号	Part No. 部品番号	Mark 記号	Description 部品名称		Req'd 個数	Remarks : serial No. 備考：実施号車
26	Z-8-97113-742-0	*	PACKING	ﾊﾟｯｷﾝｸﾞ	1	
27	Z-0-2868-0820-0		BOLT	ﾎﾞﾙﾄ	2	
28	Z-0-2868-0820-0		BOLT	ﾎﾞﾙﾄ	12	
-	Z-0-2808-0820-0		BOLT	ﾎﾞﾙﾄ	2	
29	Z-8-97045-328-0	*	GASKET	ｶﾞｽｹｯﾄ	1	
30	Z-0-5004-1028-0		BOLT&WASHER	ﾎﾞﾙﾄ&ﾜｯｼｬ	2	
-	Z-0-5004-1022-0		BOLT&WASHER	ﾎﾞﾙﾄ&ﾜｯｼｬ	6	
31	Z-9-09664-001-0		PLUG	ﾌﾟﾗｸﾞ	1	
32	Z-9-09878-597-0		PIN	ﾋﾟﾝ	2	
33	Z-9-89112-911-0		BOLT	ﾎﾞﾙﾄ	1	
34	Z-8-94453-344-0		DOWEL	ﾀﾞｳｴﾙ	2	
35	Z-5-11740-021-2		BREATHER,AIR	ﾌﾞﾘｰｻﾞ	1	INC.43
36	Z-9-09921-099-0	*	PACKING	ﾊﾟｯｷﾝｸﾞ	1	
37	Z-5-09366-036-0		PIPE,VINYL	ﾊﾟｲﾌﾟ	1	
38	Z-9-09915-238-0		CLIP	ｸﾘｯﾌﾟ	1	
39	Z-0-2808-0816-0		BOLT	ﾎﾞﾙﾄ	1	
40	Z-9-0916-4508-0		WASHER	ﾜｯｼｬ	1	
41	Z-9-12363-112-1		SPACER	ｽﾍﾟｰｻ	1	
42	Z-8-94111-750-1	*	SEAL,OIL	ｼｰﾙ	1	A,B,D,E,F
-	55593-62351	*	SEAL,OIL	ｼｰﾙ	1	C
43	Z-9-11745-024-0		ELEMENT	ｴﾚﾒﾝﾄ	1	
44	Z-8-94315-495-0		FOOT,RH	ﾌｯﾄ	1	

FIG. 1 CYLINDER BLOCK
シリンダブロック

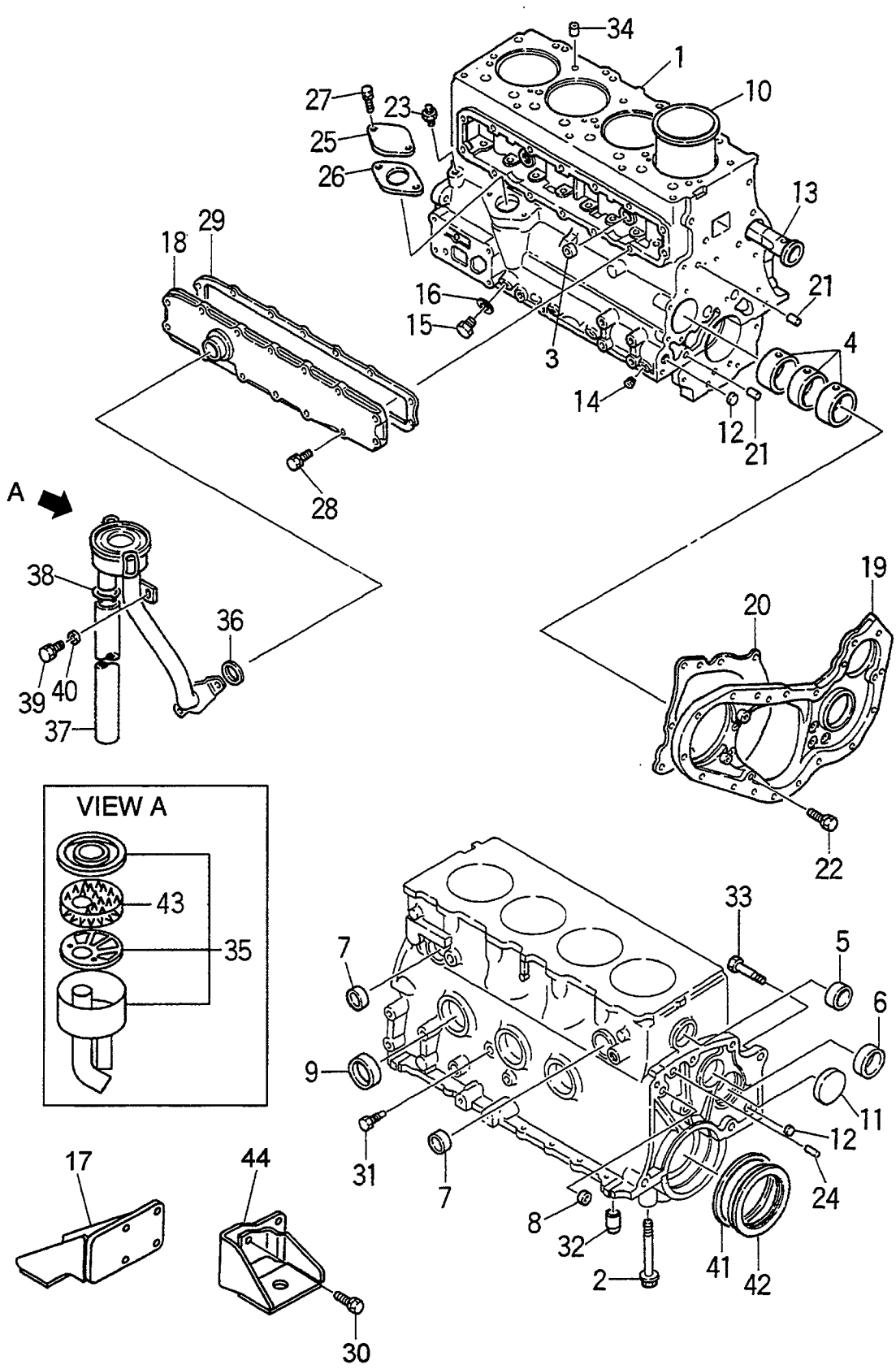

A: C240PKJ D: C240PKJ-12
B: C240PKJ-06 E: C240PKJ-17
C: C240PKJ-11 F: C240PKJ-20

FIG. 1

Item No. 見出番号	Part No. 部品番号	Mark 記号	Description 部品名称		Req'd 個数	Remarks : serial No. 備考：実施号車
A	Z-5-11210-177-4		CYLINDER BLOCK ASSY	ｼﾘﾝﾀﾞﾌﾞﾛｯｸｱｯｾﾝ	1	INC.1-10,13
1	NO PART NO.	#	BLOCK,CYLINDER	ﾌﾞﾛｯｸ	1	
2	Z-9-09802-591-0		BOLT	ﾎﾞﾙﾄ	10	
3	Z-5-11219-008-0		CUP	ｶｯﾌﾟ	2	
4	20801-08311		BEARING KIT	ﾍﾞｱﾘﾝｸﾞｷｯﾄ	1	STD
-	Z-5-11631-008-0		BEARING KIT,FRONT	ﾍﾞｱﾘﾝｸﾞｷｯﾄ	1	U.S.=0.25mm
-	Z-5-11631-009-0		BEARING KIT,CENTER	ﾍﾞｱﾘﾝｸﾞｷｯﾄ	1	U.S.=0.25mm
-	Z-5-11633-001-0		BEARING KIT,REAR	ﾍﾞｱﾘﾝｸﾞｷｯﾄ	1	U.S.=0.25mm
-	Z-5-11641-008-0		BEARING KIT,FRONT	ﾍﾞｱﾘﾝｸﾞｷｯﾄ	1	U.S.=0.5mm
-	Z-5-11641-009-0		BEARING KIT,CENTER	ﾍﾞｱﾘﾝｸﾞｷｯﾄ	1	U.S.=0.5mm
-	Z-5-11643-001-0		BEARING KIT,REAR	ﾍﾞｱﾘﾝｸﾞｷｯﾄ	1	U.S.=0.5mm
5	Z-5-11219-018-0		CUP	ｶｯﾌﾟ	1	
6	Z-5-11219-017-0		CUP	ｶｯﾌﾟ	1	
7	Z-5-11219-015-0		CUP	ｶｯﾌﾟ	2	
8	Z-5-09600-013-0		CUP	ｶｯﾌﾟ	1	
9	Z-1-09600-005-1		CUP	ｶｯﾌﾟ	3	
S1	Z-5-87813-280-0		LINER SET	ﾗｲﾅｾｯﾄ	4	INC.10 & etc. GRD=1
-	Z-5-87813-281-0		LINER SET	ﾗｲﾅｾｯﾄ	4	INC.10 & etc. GRD=2
-	Z-5-87813-282-0		LINER SET	ﾗｲﾅｾｯﾄ	4	INC.10 & etc. GRD=3
10	Z-8-97176-896-0	*	LINER,CYLINDER	ﾗｲﾅ	4	GRD=1, AX
-	Z-8-97176-897-0	*	LINER,CYLINDER	ﾗｲﾅ	4	GRD=1, CX
-	Z-8-97176-898-0	*	LINER,CYLINDER	ﾗｲﾅ	4	GRD=2, AX
-	Z-8-97176-899-0	*	LINER,CYLINDER	ﾗｲﾅ	4	GRD=2, CX
-	Z-8-97176-900-0	*	LINER,CYLINDER	ﾗｲﾅ	4	GRD=3, AX
-	Z-8-97176-901-0	*	LINER,CYLINDER	ﾗｲﾅ	4	GRD=3, CX
11	Z-8-94250-514-0		CUP	ｶｯﾌﾟ	1	
12	Z-5-11129-006-0		CUP	ｶｯﾌﾟ	2	
13	Z-8-94155-815-2		DUCT,WATER	ﾀﾞｸﾄ	1	
14	Z-5-09605-019-2		PLUG	ﾌﾟﾗｸﾞ	2	-2000.2
-	Z-5-09605-019-2		PLUG	ﾌﾟﾗｸﾞ	3	2000.3-
15	Z-9-9920-2314-0		PLUG	ﾌﾟﾗｸﾞ	1	
16	Z-9-0957-1414-0		GASKET	ｶﾞｽｹｯﾄ	1	
17	Z-5-11771-130-1		FOOT,LH	ﾌｯﾄ	1	
18	Z-8-97127-049-0		COVER	ｶﾊﾞｰ	1	
19	Z-5-11311-046-1		PLATE	ﾌﾟﾚｰﾄ	1	
S2	Z-5-87811-341-1		GASKET SET	ｶﾞｽｹｯﾄｾｯﾄ	1	A,B,D,E INC.20,26,29,36,42 & etc.
-	Z-5-87811-339-1		GASKET SET	ｶﾞｽｹｯﾄｾｯﾄ	1	C INC.20,26,29,36,42 & etc.
-	Z-5-87812-644-1		GASKET SET	ｶﾞｽｹｯﾄｾｯﾄ	1	F INC.20,26,29,36,42 & etc.
20	Z-8-97365-690-0	*	PACKING	ﾊﾟｯｷﾝｸﾞ	1	
21	Z-9-0815-1040-0		PIN	ﾋﾟﾝ	2	
22	Z-0-5004-0822-0		BOLT	ﾎﾞﾙﾄ	5	
23	Z-9-09902-299-0		NIPPLE	ﾆｯﾌﾟﾙ	1	
24	Z-9-0816-1032-0		PIN	ﾋﾟﾝ	1	
25	Z-9-11219-093-0		COVER	ｶﾊﾞｰ	1	

FIG. 2 PISTON,CRANKSHAFT & FLYWHEEL
ピストン,クランクシャフト&フライホイール

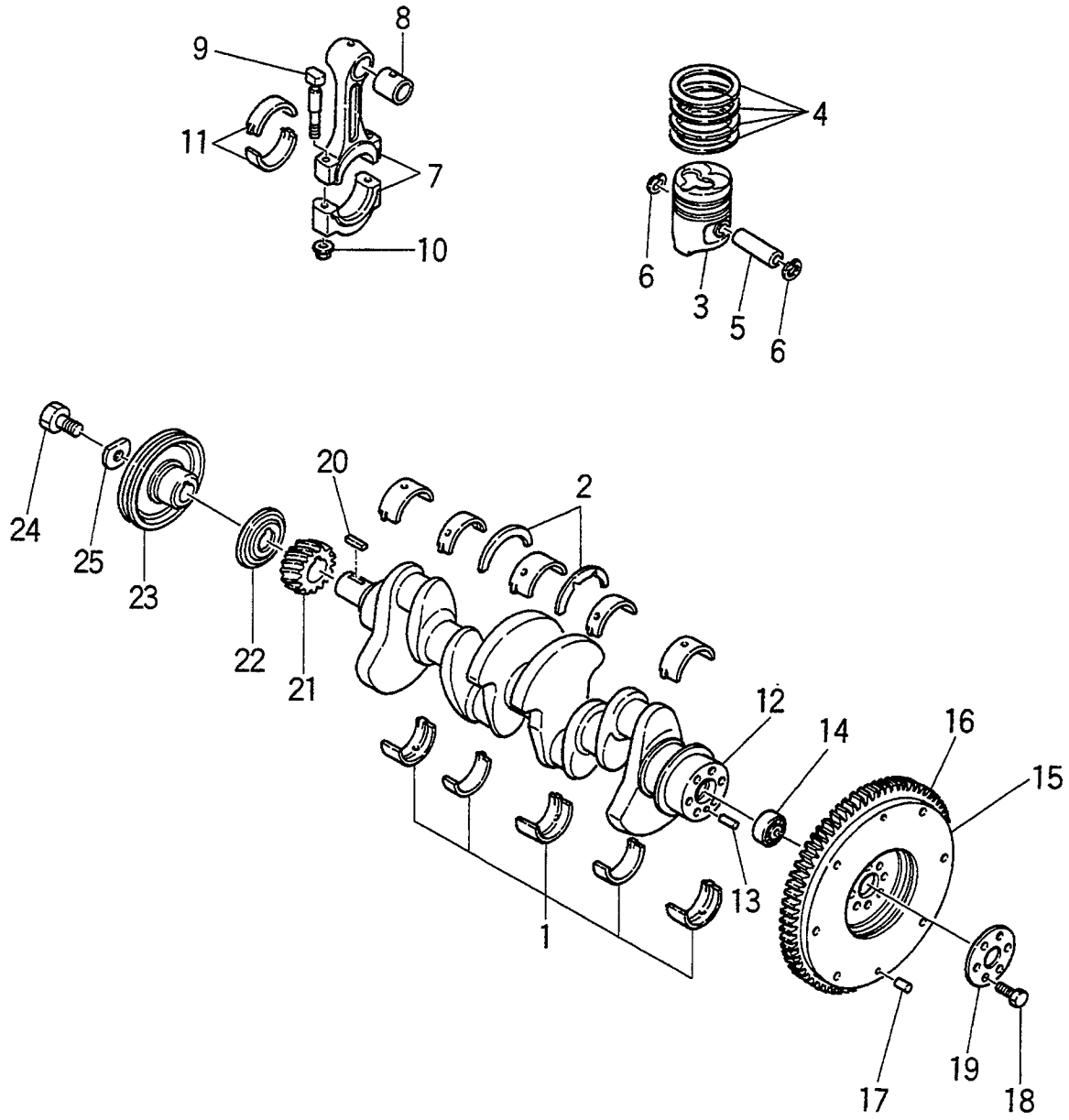

FIG. 2

A: C240PKJ D: C240PKJ-12
B: C240PKJ-06 E: C240PKJ-17
C: C240PKJ-11 F: C240PKJ-20

Item No. 見出番号	Part No. 部品番号	Mark 記号	Description 部品名称		Req'd 個数	Remarks : serial No. 備考：実施号車
1	20801-07131		BUSHING KIT	ﾌﾞｯｼﾝｸﾞｷｯﾄ	1	INC.2 STD
-	20801-07141		BUSHING KIT	ﾌﾞｯｼﾝｸﾞｷｯﾄ	1	INC.2 U.S.=0.25mm
-	20801-07151		BUSHING KIT	ﾌﾞｯｼﾝｸﾞｷｯﾄ	1	INC.2 U.S.=0.5mm
2	Z-8-94453-520-0		WASHER,THRUST	ﾜｯｼｬ	2	A,B,D,E,F
-	Z-8-97042-262-1		WASHER,THRUST	ﾜｯｼｬ	2	C
S1	Z-5-87813-280-0		LINER SET	ﾗｲﾅｾｯﾄ	4	INC.3-6,8 & etc. GRD=1
-	Z-5-87813-281-0		LINER SET	ﾗｲﾅｾｯﾄ	4	INC.3-6,8 & etc. GRD=2
-	Z-5-87813-282-0		LINER SET	ﾗｲﾅｾｯﾄ	4	INC.3-6,8 & etc. GRD=3
3	Z-8-97176-864-0	*	PISTON	ﾋﾟｽﾄﾝ	4	GRD=AX
-	Z-8-97176-865-0	*	PISTON	ﾋﾟｽﾄﾝ	4	GRD=CX
4	Z-8-94471-442-0	*	RING SET	ﾘﾝｸﾞｾｯﾄ	4	
5	Z-5-12211-017-0	*	PIN,PISTON	ﾋﾟﾝ	4	
6	Z-5-09587-001-0	*	RING,SNAP	ﾘﾝｸﾞ	8	
A	Z-5-12230-039-1		CONNECTING ROD ASSY	ｺﾈｸﾃｨﾝｸﾞﾛｯﾄﾞｱｯｾﾝ	4	INC.7-10
7	NO PART NO.	#	ROD	ﾛｯﾄﾞ	4	
8	Z-5-12251-005-0	*	BUSHING	ﾌﾞｯｼﾝｸﾞ	4	
9	Z-5-12235-009-0		BOLT	ﾎﾞﾙﾄ	8	
10	Z-5-09409-016-0		NUT	ﾅｯﾄ	8	
11	Z-8-94142-208-0		BUSHING	ﾌﾞｯｼﾝｸﾞ	4	STD
-	Z-8-94163-174-0		BUSHING	ﾌﾞｯｼﾝｸﾞ	4	U.S.=0.25mm
-	Z-8-94163-175-0		BUSHING	ﾌﾞｯｼﾝｸﾞ	4	U.S.=0.5mm
12	Z-8-94139-669-0		CRANKSHAFT	ｸﾗﾝｸｼｬﾌﾄ	1	INC.13
13	Z-9-0816-1220-0		PIN,STRAIGHT	ﾋﾟﾝ	1	
14	Z-8-97175-264-0		BEARING	ﾍﾞｱﾘﾝｸﾞ	1	A,B,D,E,F
-	03020-06302		BEARING	ﾍﾞｱﾘﾝｸﾞ	1	C
15	Z-5-12330-116-1		FLYWHEEL	ﾌﾗｲﾎｲｰﾙ	1	A,B,D,E,F INC.16
-	55593-62341		FLYWHEEL	ﾌﾗｲﾎｲｰﾙ	1	C INC.16
16	Z-9-12333-605-1		GEAR,RING	ｷﾞﾔｰ	1	
17	Z-9-0815-0616-0		PIN,STRAIGHT	ﾋﾟﾝ	2	
18	Z-8-97065-984-1		BOLT	ﾎﾞﾙﾄ	6	
19	Z-5-12336-010-1		WASHER	ﾜｯｼｬ	1	
20	Z-9-0803-0743-0		KEY,FEATHER	ｷｰ	1	
21	Z-5-12521-025-0		GEAR	ｷﾞﾔｰ	1	
22	Z-9-12362-039-0		THROWER,OIL	ｽﾛﾜ	1	
23	Z-9-12373-605-2		PULLEY	ﾌﾟｰﾘ	1	
24	Z-9-09802-606-0		BOLT	ﾎﾞﾙﾄ	1	
25	Z-9-12379-016-0		WASHER	ﾜｯｼｬ	1	

FIG. 3 TIMING GEAR & CASE
タイミング ギ ヤー&ケース

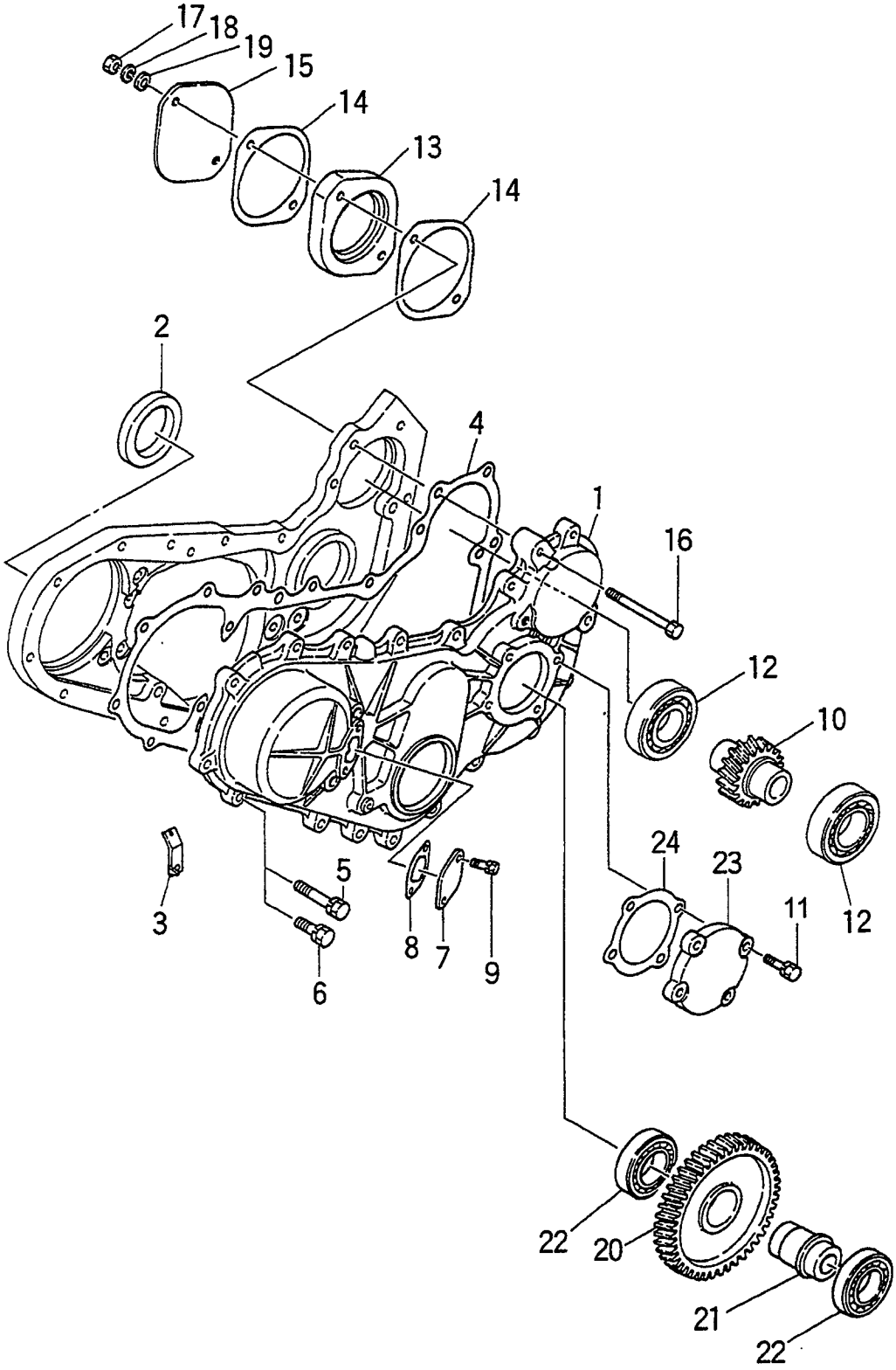

FIG. 3

A: C240PKJ D: C240PKJ-12
B: C240PKJ-06 E: C240PKJ-17
C: C240PKJ-11 F: C240PKJ-20

Item No. 見出番号	Part No. 部品番号	Mark 記号	Description 部品名称		Req'd 個数	Remarks : serial No. 備考：実施号車
1	Z-5-11311-047-0		CASE,GEAR	ｹｰｽ	1	
S1	Z-5-87811-341-1		GASKET SET	ｶﾞｽｹｯﾄｾｯﾄ	1	A,B,D,E INC.2,4 & etc.
-	Z-5-87811-339-1		GASKET SET	ｶﾞｽｹｯﾄｾｯﾄ	1	C INC.2,4 & etc.
-	Z-5-87812-644-1		GASKET SET	ｶﾞｽｹｯﾄｾｯﾄ	1	F INC.2,4 & etc.
2	Z-5-09625-079-0	*	SEAL,OIL	ｼｰﾙ	1	
3	Z-9-11327-045-0		POINTER,GEAR	ﾎﾟｲﾝﾀ	1	
4	Z-8-97113-743-0	*	PACKING	ﾊﾟｯｷﾝｸﾞ	1	
5	Z-0-2808-0845-0		BOLT	ﾎﾞﾙﾄ	7	
6	Z-0-2808-0825-0		BOLT	ﾎﾞﾙﾄ	6	
7	Z-5-11321-009-0		COVER	ｶﾊﾞｰ	1	
8	Z-8-97118-698-0		PACKING	ﾊﾟｯｷﾝｸﾞ	1	
9	Z-0-5004-0612-0		BOLT&WASHER	ﾎﾞﾙﾄ&ﾜｯｼｬ	2	
10	Z-8-94334-855-0		GEAR	ｷﾞﾔｰ	1	
11	Z-0-5004-0816-0		BOLT&WASHER	ﾎﾞﾙﾄ&ﾜｯｼｬ	4	
12	03000-06207		BEARING	ﾍﾞｱﾘﾝｸﾞ	2	
13	Z-5-11321-091-0		SPACER	ｽﾍﾟｰｻ	1	
14	Z-5-11322-018-0		PACKING	ﾊﾟｯｷﾝｸﾞ	2	
15	Z-5-11321-036-0		COVER	ｶﾊﾞｰ	1	
16	Z-0-2808-1090-0		BOLT	ﾎﾞﾙﾄ	2	
17	01400-10010		NUT	ﾅｯﾄ	2	
18	02010-00010		WASHER	ﾜｯｼｬ	2	
19	Z-9-09160-510-0		WASHER	ﾜｯｼｬ	2	
20	Z-5-12525-014-2		GEAR	ｷﾞﾔｰ	1	
21	Z-5-12533-013-0		SHAFT	ｼｬﾌﾄ	1	
22	Z-5-09800-032-0		BEARING	ﾍﾞｱﾘﾝｸﾞ	2	
23	Z-5-11321-038-0		COVER	ｶﾊﾞｰ	1	
24	Z-5-11322-019-0		PACKING	ﾊﾟｯｷﾝｸﾞ	1	

FIG. 4 OIL PAN
オイルパン

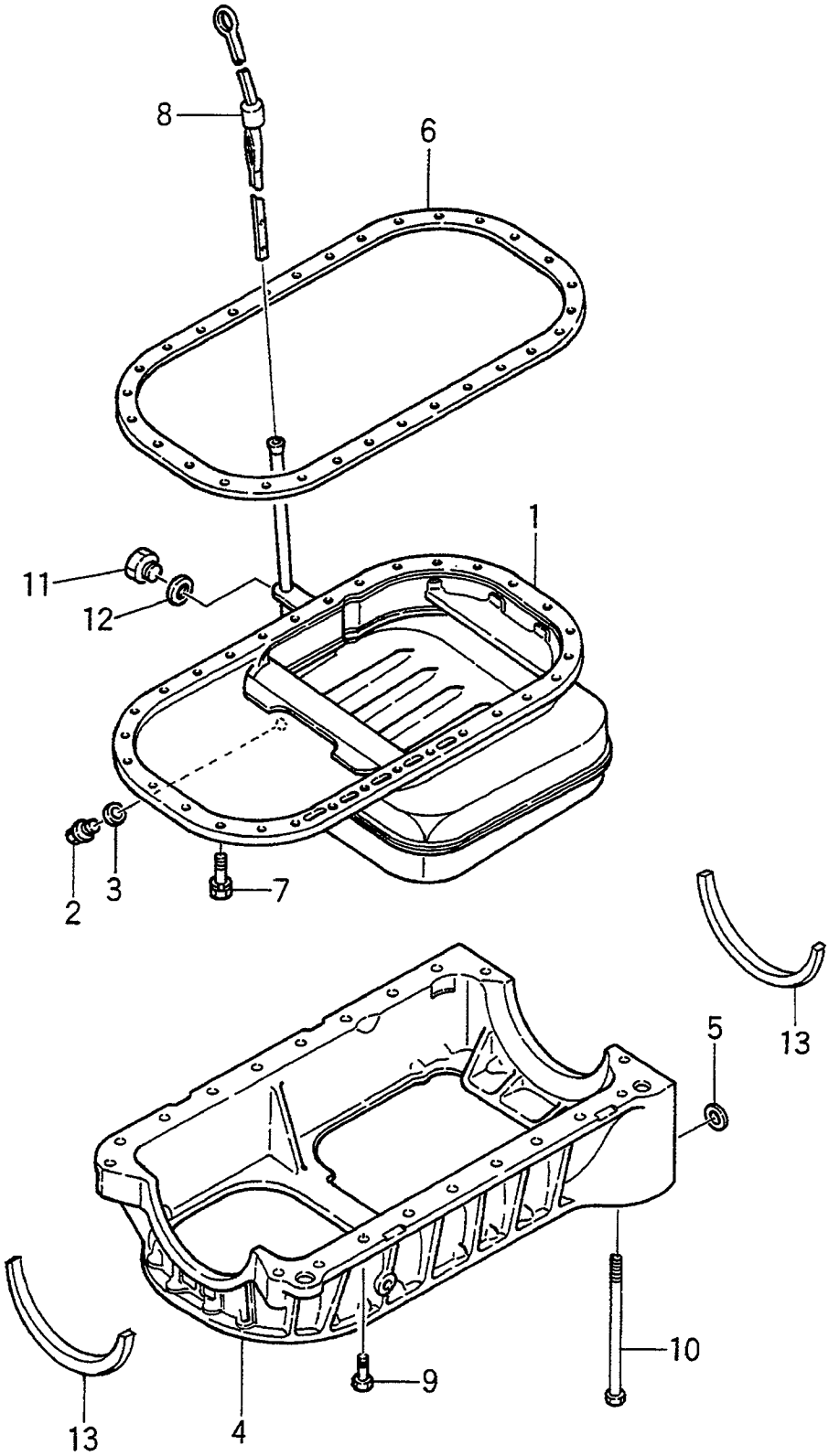

FIG. 4

A: C240PKJ D: C240PKJ-12
B: C240PKJ-06 E: C240PKJ-17
C: C240PKJ-11 F: C240PKJ-20

Item No. 見出番号	Part No. 部品番号	Mark 記号	Description 部品名称		Req'd 個数	Remarks : serial No. 備考：実施号車
1	Z-5-11360-072-2		PAN,OIL	ﾊﾟﾝ	1	A,B,C,E,F INC.2,3
-	Z-8-94336-242-0		PAN,OIL	ﾊﾟﾝ	1	D INC.2,3,11,12
2	Z-9-09662-012-0		PLUG	ﾌﾟﾗｸﾞ	1	
S1	Z-5-87811-341-1		GASKET SET	ｶﾞｽｹｯﾄｾｯﾄ	1	A,B,D,E INC.3,6,13 & etc.
-	Z-5-87811-339-1		GASKET SET	ｶﾞｽｹｯﾄｾｯﾄ	1	C INC.3,6,13 & etc.
-	Z-5-87812-644-1		GASKET SET	ｶﾞｽｹｯﾄｾｯﾄ	1	F INC.3,6,13 & etc.
3	Z-9-0957-1416-0	*	PACKING	ﾊﾟｯｷﾝｸﾞ	1	
4	Z-8-94470-548-2		CASE	ｹｰｽ	1	
5	Z-9-09651-133-0		SHIM	ｼﾑ	AR	t=0.30mm
-	Z-9-09651-134-0		SHIM	ｼﾑ	AR	t=0.35mm
-	Z-9-09651-135-0		SHIM	ｼﾑ	AR	t=0.40mm
-	Z-9-09651-136-0		SHIM	ｼﾑ	AR	t=0.45mm
-	Z-9-09651-137-0		SHIM	ｼﾑ	AR	t=0.50mm
-	Z-9-09651-138-0		SHIM	ｼﾑ	AR	t=0.55mm
-	Z-9-09651-139-0		SHIM	ｼﾑ	AR	t=0.60mm
-	Z-9-09651-140-0		SHIM	ｼﾑ	AR	t=0.65mm
-	Z-9-09651-141-0		SHIM	ｼﾑ	AR	t=0.70mm
-	Z-9-09651-142-0		SHIM	ｼﾑ	AR	t=0.75mm
-	Z-9-09651-143-0		SHIM	ｼﾑ	AR	t=0.80mm
-	Z-9-09651-144-0		SHIM	ｼﾑ	AR	t=0.85mm
-	Z-9-09651-145-0		SHIM	ｼﾑ	AR	t=0.90mm
6	Z-8-97045-322-0	*	GASKET	ｶﾞｽｹｯﾄ	1	
7	Z-0-5004-0616-0		BOLT&WASHER	ﾎﾞﾙﾄ&ﾜｯｼｬ	30	
-	Z-8-97015-515-1		BOLT&WASHER	ﾎﾞﾙﾄ&ﾜｯｼｬ	2	
8	Z-5-11760-147-0		GAUGE,OIL LEVEL	ｹﾞｰｼﾞ	1	
9	Z-0-2868-0825-0		BOLT	ﾎﾞﾙﾄ	7	
-	Z-0-2808-0830-0		BOLT	ﾎﾞﾙﾄ	7	
10	Z-1-09044-075-1		BOLT	ﾎﾞﾙﾄ	4	
11	Z-9-9920-2316-0		PLUG	ﾌﾟﾗｸﾞ	1	
12	Z-9-0957-1416-0		PACKING	ﾊﾟｯｷﾝｸﾞ	1	A,B,C,E,F
-	Z-9-0957-1316-0		GASKET	ｶﾞｽｹｯﾄ	1	D
13	Z-9-11258-108-0	*	PACKING	ﾊﾟｯｷﾝｸﾞ	2	

FIG. 5 FLYWHEEL HOUSING
フライホイール ハウジング

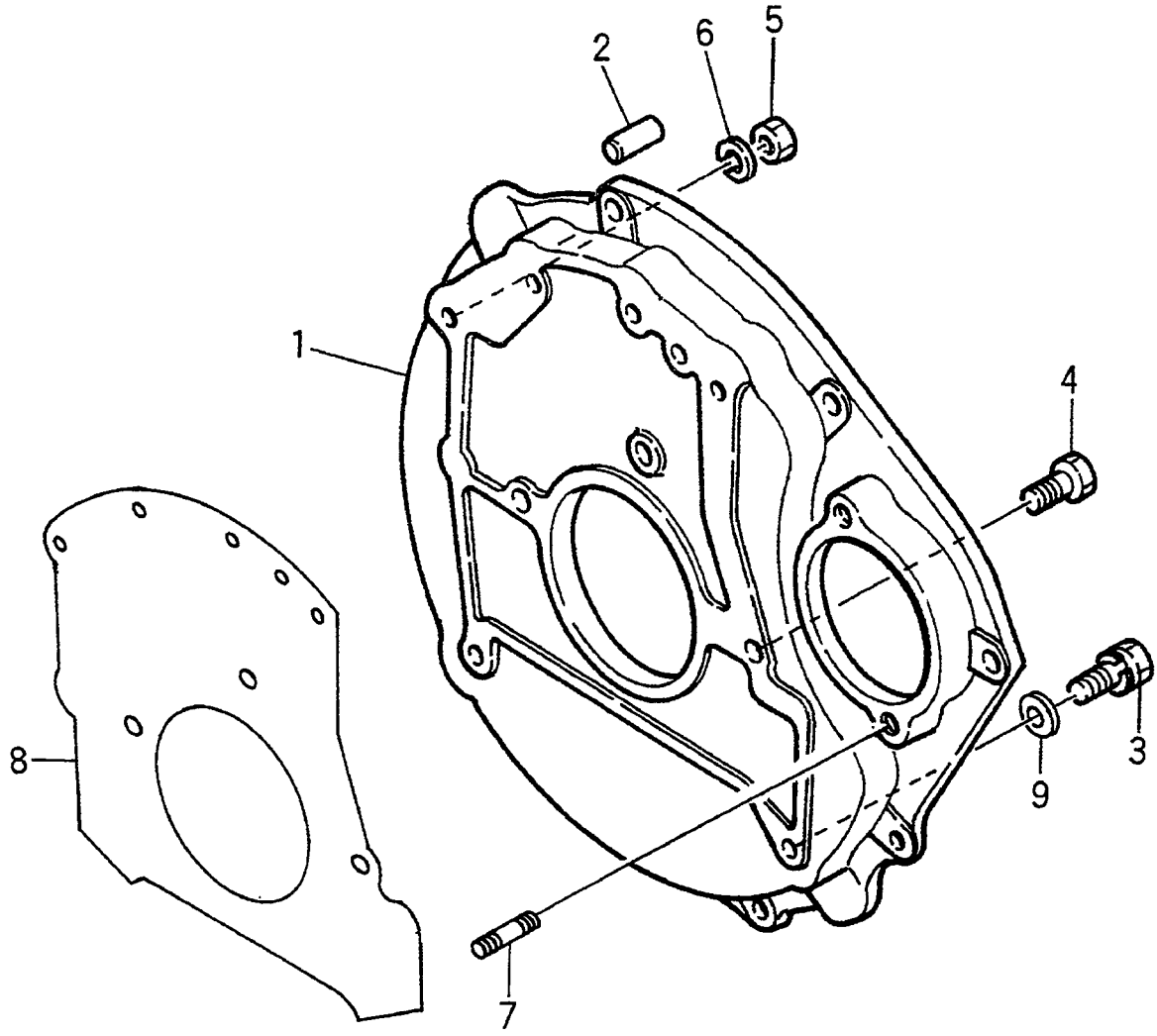

FIG. 5

A: C240PKJ D: C240PKJ-12
B: C240PKJ-06 E: C240PKJ-17
C: C240PKJ-11 F: C240PKJ-20

Item No. 見出番号	Part No. 部品番号	Mark 記号	Description 部品名称		Req'd 個数	Remarks : serial No. 備考：実施号車
1	Z-5-11341-104-3		HOUSING	ﾊｳｼﾞﾝｸﾞ	1	A,B,D,E,F
-	Z-8-94147-424-3		HOUSING	ﾊｳｼﾞﾝｸﾞ	1	C
2	Z-9-0815-1228-0		PIN	ﾋﾟﾝ	2	
3	Z-0-5004-1230-0		BOLT&WASHER	ﾎﾞﾙﾄ&ﾜｯｼｬ	2	A,B,D,E,F
-	Z-0-2808-1230-0		BOLT	ﾎﾞﾙﾄ	2	C
4	Z-0-5004-1025-0		BOLT&WASHER	ﾎﾞﾙﾄ&ﾜｯｼｬ	3	
-	Z-5-09000-227-0		BOLT	ﾎﾞﾙﾄ	3	
5	01400-10010		NUT	ﾅｯﾄ	1	
6	Z-9-0915-0510-0		WASHER	ﾜｯｼｬ	1	
7	Z-9-9441-1233-0		STUD	ｽﾀｯﾄﾞ	2	
8	Z-8-97120-028-0		PACKING	ﾊﾟｯｷﾝｸﾞ	1	C
9	Z-9-0957-2012-0		GASKET	ｶﾞｽｹｯﾄ	2	C

FIG. 6 CYLINDER HEAD
シリンダヘッド

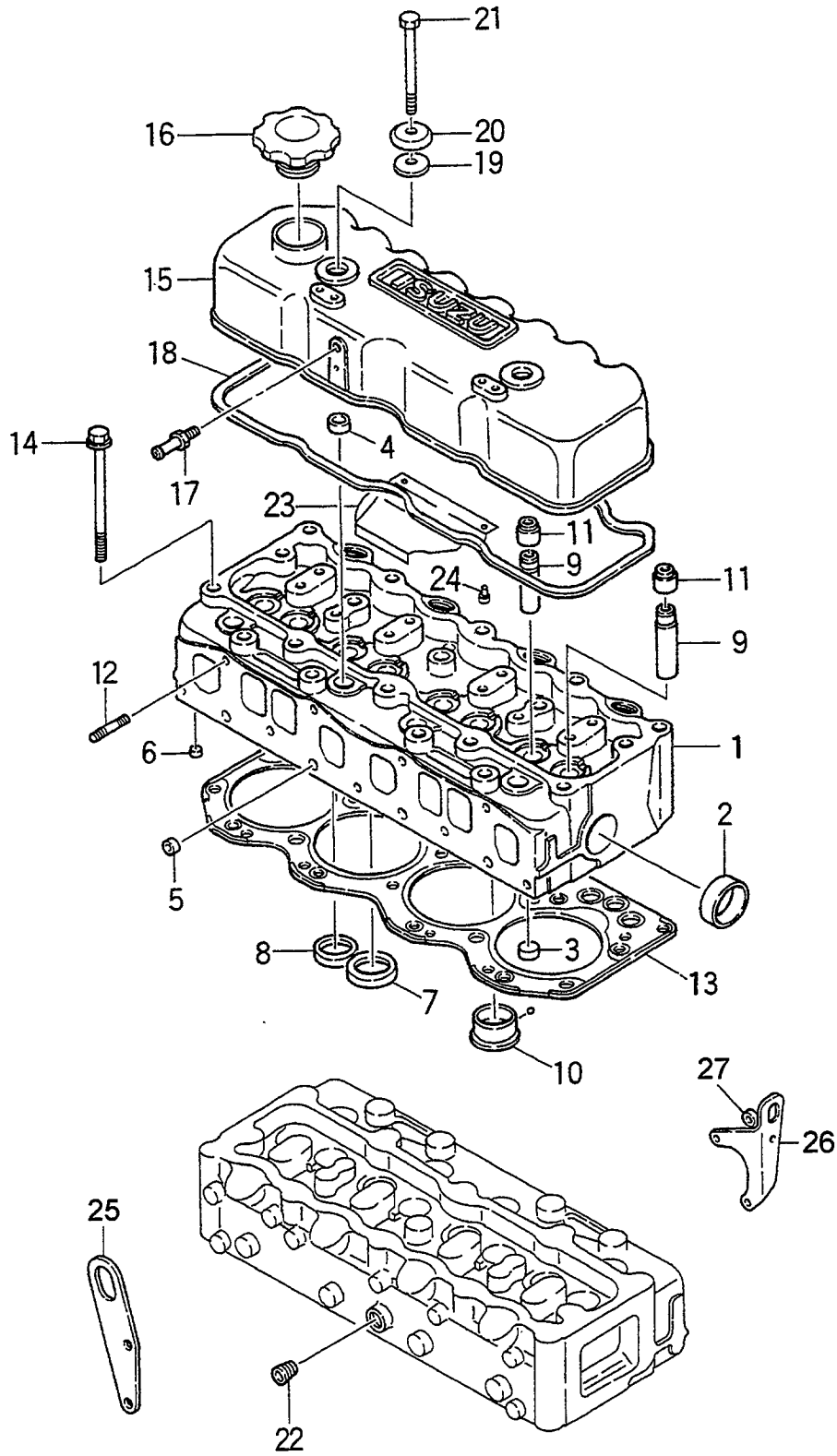

FIG. 6

A: C240PKJ D: C240PKJ-12
B: C240PKJ-06 E: C240PKJ-17
C: C240PKJ-11 F: C240PKJ-20

Item No. 見出番号	Part No. 部品番号	Mark 記号	Description 部品名称		Req'd 個数	Remarks : serial No. 備考：実施号車
A	Z-5-11110-207-0		CYLINDER HEAD ASSY	ｼﾘﾝﾀﾞﾍｯﾄﾞｱｯｾﾝ	1	INC.1-10
1	NO PART NO.	#	HEAD,CYLINDER	ﾍｯﾄﾞ	1	
2	Z-1-09600-005-1		CUP	ｶｯﾌﾟ	1	
3	Z-5-11129-006-0		CUP	ｶｯﾌﾟ	4	
4	Z-5-11219-008-0		CUP	ｶｯﾌﾟ	5	
5	Z-5-09600-013-0		CUP	ｶｯﾌﾟ	4	
6	Z-9-09860-522-0		PLUG	ﾌﾟﾗｸﾞ	4	
7	Z-5-11715-023-0		SEAT	ｼｰﾄ	4	
8	Z-5-11711-026-0		SEAT	ｼｰﾄ	4	
9	20801-0Z141		VALVE,GUIDE	ﾊﾞﾙﾌﾞ	8	
10	Z-5-11150-108-0		PLUG,HEATER	ﾌﾟﾗｸﾞ	4	
S1	Z-5-87811-341-1		GASKET SET	ｶﾞｽｹｯﾄｾｯﾄ	1	A,B,D,E INC.11,13,18,19 & etc.
-	Z-5-87811-339-1		GASKET SET	ｶﾞｽｹｯﾄｾｯﾄ	1	C INC.11,13,18,19 & etc.
-	Z-5-87812-644-1		GASKET SET	ｶﾞｽｹｯﾄｾｯﾄ	1	F INC.11,13,18,19 & etc.
S2	Z-5-87813-019-1		GASKET SET,HEAD	ｶﾞｽｹｯﾄｾｯﾄ	1	INC.11,13,18,19 & etc.
11	Z-8-97120-307-0	*	SEAL	ｼｰﾙ	8	
12	Z-9-0411-0835-0		STUD	ｽﾀｯﾄﾞ	3	
-	Z-9-0411-0840-0		STUD	ｽﾀｯﾄﾞ	3	
-	Z-9-0411-0845-0		STUD	ｽﾀｯﾄﾞ	1	
13	Z-8-97018-936-1	*	GASKET	ｶﾞｽｹｯﾄ	1	
14	Z-8-94247-355-1		BOLT	ﾎﾞﾙﾄ	19	
15	Z-5-11170-240-1		COVER	ｶﾊﾞｰ	1	INC.16,17,23,24
16	Z-9-11751-038-1		CAP	ｷｬｯﾌﾟ	1	
17	Z-5-11179-052-0		NIPPLE	ﾆｯﾌﾟﾙ	1	
18	Z-8-94447-570-0	*	PACKING	ﾊﾟｯｷﾝｸﾞ	1	
19	Z-9-11179-808-0	*	PACKING	ﾊﾟｯｷﾝｸﾞ	2	
20	Z-9-11179-132-0		WASHER	ﾜｯｼｬ	2	
21	Z-5-09000-096-1		BOLT	ﾎﾞﾙﾄ	2	
22	Z-5-09605-005-0		PLUG,HEATER	ﾌﾟﾗｸﾞ	1	
23	Z-5-11179-046-0		PLATE	ﾌﾟﾚｰﾄ	1	
24	Z-9-0652-0412-0		RIVET	ﾘﾍﾞｯﾄ	1	
25	Z-5-11777-054-0		HANGER	ﾊﾝｶﾞ	1	
26	Z-9-11777-136-0		HANGER	ﾊﾝｶﾞ	1	
27	Z-9-14149-173-0		PIECE	ﾋﾟｰｽ	2	

FIG. 7 VALVE MECHANISM
ﾊﾞﾙﾌﾞﾒｶﾆｽﾞﾑ

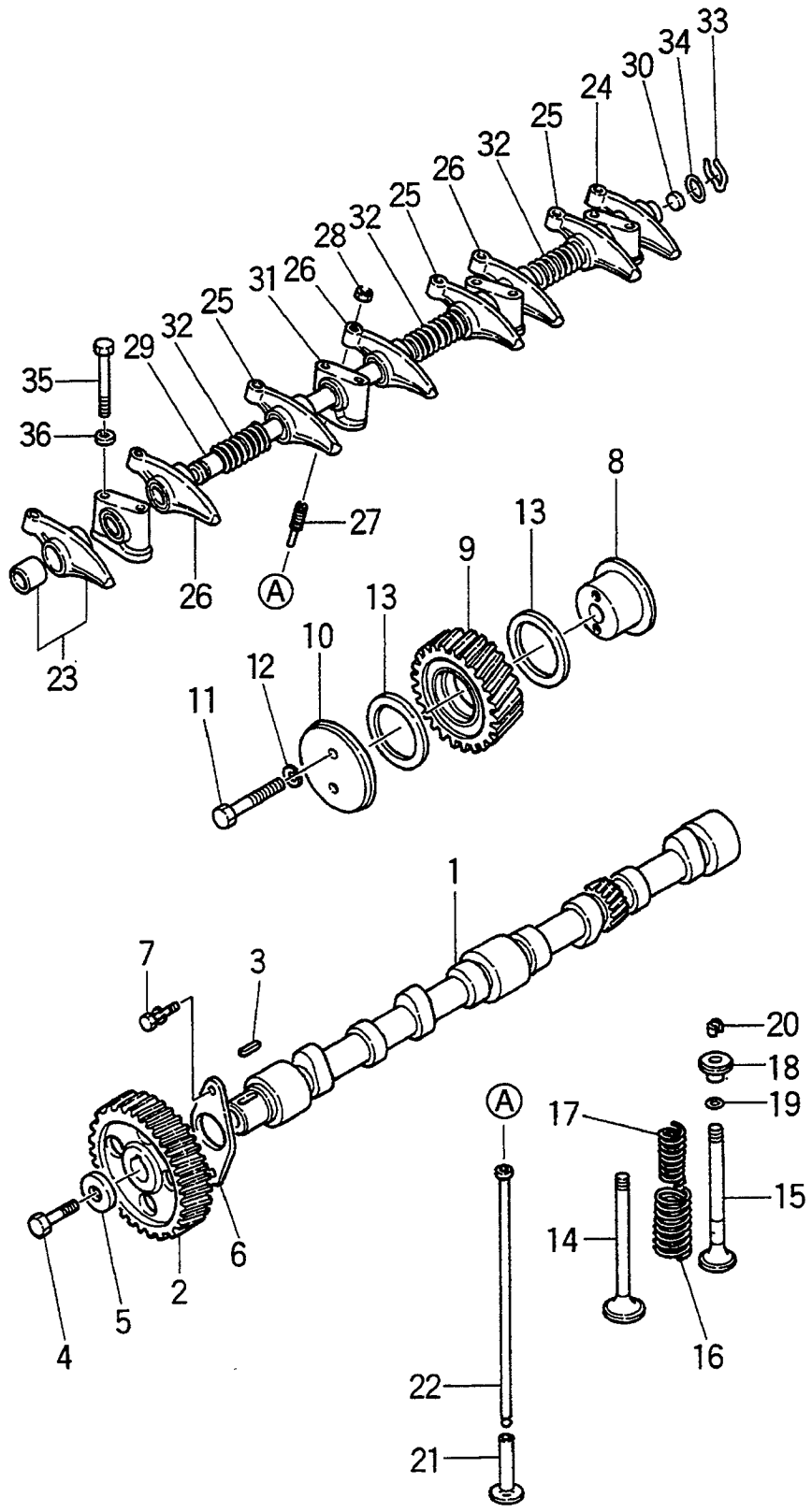

FIG. 7

A: C240PKJ D: C240PKJ-12
B: C240PKJ-06 E: C240PKJ-17
C: C240PKJ-11 F: C240PKJ-20

Item No. 見出番号	Part No. 部品番号	Mark 記号	Description 部品名称		Req'd 個数	Remarks : serial No. 備考：実施号車
1	Z-5-12511-078-4		CAMSHAFT	ｶﾑｼｬﾌﾄ	1	
2	Z-9-12522-144-1		GEAR	ｷﾞﾔｰ	1	Z=42
3	Z-9-0800-0718-0		KEY,FEATHER	ｷｰ	1	
4	Z-5-09000-069-0		BOLT	ﾎﾞﾙﾄ	1	
5	Z-5-12519-002-1		WASHER	ﾜｯｼｬ	1	
6	Z-9-11681-010-1		PLATE	ﾌﾟﾚｰﾄ	1	
7	Z-0-5004-0816-0		BOLT	ﾎﾞﾙﾄ	2	
8	Z-9-12531-024-1		SHAFT	ｼｬﾌﾄ	1	
9	Z-5-12523-023-1		GEAR	ｷﾞﾔｰ	1	Z=31
10	Z-5-12535-005-1		COLLAR	ｶﾗｰ	1	
11	01106-08055		BOLT	ﾎﾞﾙﾄ	2	
12	Z-9-0915-0808-0		WASHER	ﾜｯｼｬ	2	
13	Z-5-09503-082-0		WASHER	ﾜｯｼｬ	2	
14	20801-0Z151		VALVE,INLET	ﾊﾞﾙﾌﾞ	4	
15	20801-0Z161		VALVE,EXHAUST	ﾊﾞﾙﾌﾞ	4	
16	Z-5-12561-011-0		SPRING	ｽﾌﾟﾘﾝｸﾞ	8	-2002.4
-	Z-9-12561-037-0		SPRING	ｽﾌﾟﾘﾝｸﾞ	8	2002.5-
17	Z-5-12562-007-0		SPRING	ｽﾌﾟﾘﾝｸﾞ	8	
18	Z-8-97167-265-2		SEAT	ｼｰﾄ	8	INC.19
S1	Z-5-87811-341-1		GASKET SET	ｶﾞｽｹｯﾄｾｯﾄ	1	A,B,D,E INC.19 & etc.
-	Z-5-87811-339-1		GASKET SET	ｶﾞｽｹｯﾄｾｯﾄ	1	C INC.19 & etc.
-	Z-5-87812-644-1		GASKET SET	ｶﾞｽｹｯﾄｾｯﾄ	1	F INC.19 & etc.
S2	Z-5-87813-019-1		GASKET SET,HEAD	ｶﾞｽｹｯﾄｾｯﾄ	1	INC.19 & etc.
19	Z-9-12559-008-0	*	RING,SEAL	ﾘﾝｸﾞ	8	
20	Z-5-12565-004-0		COLLAR	ｶﾗｰ	16	
21	Z-9-12571-801-1		TAPPET	ﾀﾍﾟｯﾄ	8	
22	Z-5-12575-016-0		ROD,PUSH	ﾛｯﾄﾞ	8	
23	Z-5-12611-020-1		ARM,ROCKER	ｱｰﾑ	1	
24	Z-5-12611-022-1		ARM,ROCKER	ｱｰﾑ	1	
25	Z-9-12611-347-0		ARM,ROCKER	ｱｰﾑ	3	
26	Z-9-12611-349-0		ARM,ROCKER	ｱｰﾑ	3	
27	Z-8-94152-283-1		SCREW	ｽｸﾘｭ	8	
28	Z-9-0911-1508-0		NUT	ﾅｯﾄ	8	
29	Z-8-94100-291-0		SHAFT	ｼｬﾌﾄ	1	
30	Z-9-12626-005-0		PLUG	ﾌﾟﾗｸﾞ	2	
31	Z-9-12628-093-0		BRACKET,ROCKER	ﾌﾞﾗｹｯﾄ	4	
32	Z-9-09940-607-0		SPRING	ｽﾌﾟﾘﾝｸﾞ	3	
33	Z-9-0918-0019-0		RING,SNAP	ﾘﾝｸﾞ	2	
34	Z-9-09851-931-0		WASHER	ﾜｯｼｬ	2	
35	Z-0-1081-0850-0		BOLT	ﾎﾞﾙﾄ	8	
36	Z-9-0916-4008-0		WASHER	ﾜｯｼｬ	8	

FIG. 8 AIR INTAKE & EXHAUST SYSTEM (A,B,C,E,F)
エアーインテーク&エキゾ ーストシステム

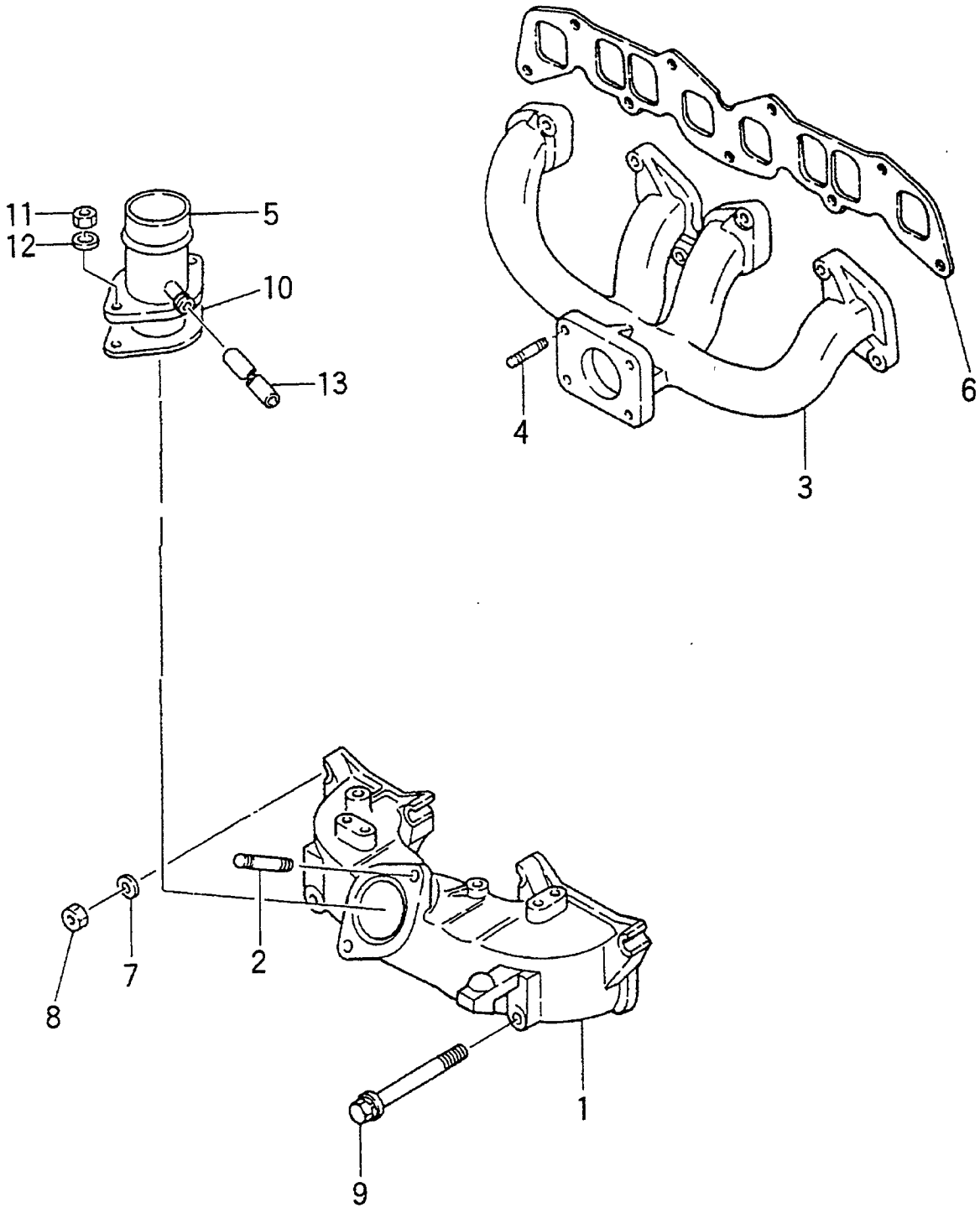

FIG. 8

A: C240PKJ D: C240PKJ-12
B: C240PKJ-06 E: C240PKJ-17
C: C240PKJ-11 F: C240PKJ-20

Item No. 見出番号	Part No. 部品番号	Mark 記号	Description 部品名称		Req'd 個数	Remarks : serial No. 備考：実施号車
1	Z-5-14111-073-2		MANIFOLD,INLET	ﾏﾆﾎｰﾙﾄﾞ	1	A,B,C,E,F
2	Z-9-0411-0825-0		STUD	ｽﾀｯﾄﾞ	2	A,B,C,E,F
3	Z-8-94139-845-1		MANIFOLD,EXHAUST	ﾏﾆﾎｰﾙﾄﾞ	1	A,B,C,E,F
4	Z-9-0441-1025-0		STUD	ｽﾀｯﾄﾞ	4	A,B,C,E,F
5	Z-8-97128-469-1		PIPE,INLET	ﾊﾟｲﾌﾟ	1	A,B,C,E,F
S1	Z-5-87811-341-1		GASKET SET	ｶﾞｽｹｯﾄｾｯﾄ	1	A,B,E INC.6,10 & etc.
-	Z-5-87811-339-1		GASKET SET	ｶﾞｽｹｯﾄｾｯﾄ	1	C INC.6,10 & etc.
-	Z-5-87812-644-1		GASKET SET	ｶﾞｽｹｯﾄｾｯﾄ	1	F INC.6,10 & etc.
S2	Z-5-87813-019-1		GASKET SET,HEAD	ｶﾞｽｹｯﾄｾｯﾄ	1	A,B,C,E,F INC.6 & etc.
6	Z-8-97113-744-0	*	GASKET	ｶﾞｽｹｯﾄ	1	A,B,C,E,F
7	Z-9-0916-4608-0		WASHER	ﾜｯｼｬ	6	A,B,C,E,F
8	01400-10008		NUT	ﾅｯﾄ	7	A,B,C,E,F
9	Z-1-09044-075-1		BOLT&WASHER	ﾎﾞﾙﾄ&ﾜｯｼｬ	2	A,B,C,E,F
10	Z-8-97086-292-0	*	PACKING	ﾊﾟｯｷﾝｸﾞ	1	A,B,C,E,F
11	01400-10008		NUT	ﾅｯﾄ	2	A,B,C,E,F
12	Z-9-0915-0508-0		WASHER	ﾜｯｼｬ	2	A,B,C,E,F
13	Z-5-09360-130-1		HOSE	ﾎｰｽ	1	A,B,C,E,F

FIG. 9 AIR INTAKE & EXHAUST SYSTEM (D)

エアーインテーク&エキゾ ーストシステム

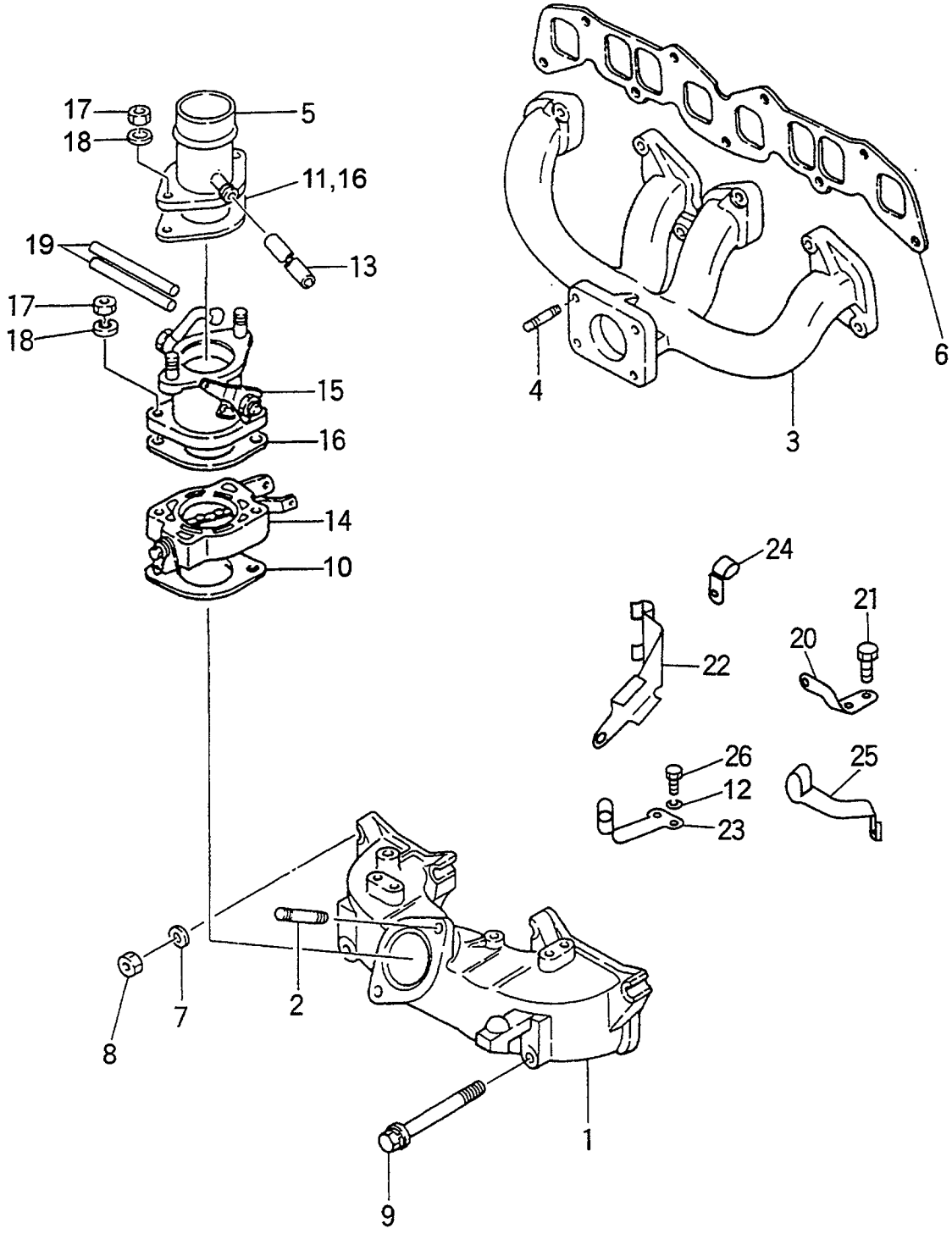

FIG. 9

A: C240PKJ D: C240PKJ-12
B: C240PKJ-06 E: C240PKJ-17
C: C240PKJ-11 F: C240PKJ-20

Item No. 見出番号	Part No. 部品番号	Mark 記号	Description 部品名称		Req'd 個数	Remarks : serial No. 備考：実施号車
1	Z-5-14111-073-2		MANIFOLD,INLET	ﾏﾆﾎｰﾙﾄﾞ	1	D
2	Z-9-0411-0850-0		STUD	ｽﾀｯﾄﾞ	2	D
3	Z-8-94139-845-1		MANIFOLD,EXHAUST	ﾏﾆﾎｰﾙﾄﾞ	1	D
4	Z-9-0441-1025-0		STUD	ｽﾀｯﾄﾞ	4	D
5	Z-8-94134-780-1		PIPE,INLET	ﾊﾟｲﾌﾟ	1	D
S1	Z-5-87811-341-1		GASKET SET	ｶﾞｽｹｯﾄｾｯﾄ	1	D
						INC.6,10-16 & etc.
S2	Z-5-87813-019-1		GASKET SET,HEAD	ｶﾞｽｹｯﾄｾｯﾄ	1	D
						INC.6 & etc.
6	Z-8-97113-744-0	*	GASKET	ｶﾞｽｹｯﾄ	1	D
7	Z-9-0916-4608-0		WASHER	ﾜｯｼｬ	6	D
8	01400-10008		NUT	ﾅｯﾄ	7	D
9	Z-1-09044-075-1		BOLT&WASHER	ﾎﾞﾙﾄ&ﾜｯｼｬ	2	D
10	Z-8-97086-292-0	*	PACKING	ﾊﾟｯｷﾝｸﾞ	1	D
11	Z-5-14319-319-0		STABILIZER	ｽﾀﾋﾞﾗｲｻﾞ	1	D
12	02010-00006		WASHER	ﾜｯｼｬ	2	D
13	Z-5-19360-320-0		HOSE	ﾎｰｽ	1	D
14	Z-5-14310-360-1		INTAKE SHUTTER	ｲﾝﾃｰｸｼｬｯﾀ	1	D
						SEE FIG.11
15	Z-8-94323-746-0		THROTTLE VALVE	ｽﾛｯﾄﾙﾊﾞﾙﾌﾞ	1	D
						SEE FIG.10
16	Z-8-97086-292-0	*	PACKING	ﾊﾟｯｷﾝｸﾞ	2	D
17	01400-10008		NUT	ﾅｯﾄ	4	D
18	Z-9-0915-0508-0		WASHER	ﾜｯｼｬ	4	D
19	Z-9-09914-909-0		PIPE,VINYL	ﾊﾟｲﾌﾟ	2	D
20	Z-5-14334-036-0		BRACKET	ﾌﾞﾗｹｯﾄ	1	D
21	Z-0-5004-0612-0		BOLT&WASHER	ﾎﾞﾙﾄ&ﾜｯｼｬ	2	D
22	Z-5-14319-134-0		CLIP	ｸﾘｯﾌﾟ	1	D
23	Z-8-94136-702-0		CLIP	ｸﾘｯﾌﾟ	1	D
24	Z-9-09916-374-0		CLIP	ｸﾘｯﾌﾟ	1	D
25	Z-9-09916-818-0		CLIP	ｸﾘｯﾌﾟ	1	D
26	Z-0-2808-0610-0		BOLT&WASHER	ﾎﾞﾙﾄ&ﾜｯｼｬ	2	D

FIG. 10 THROTTLE VALVE (D)
ｽﾛｯﾄﾙﾊﾞﾙﾌﾞ

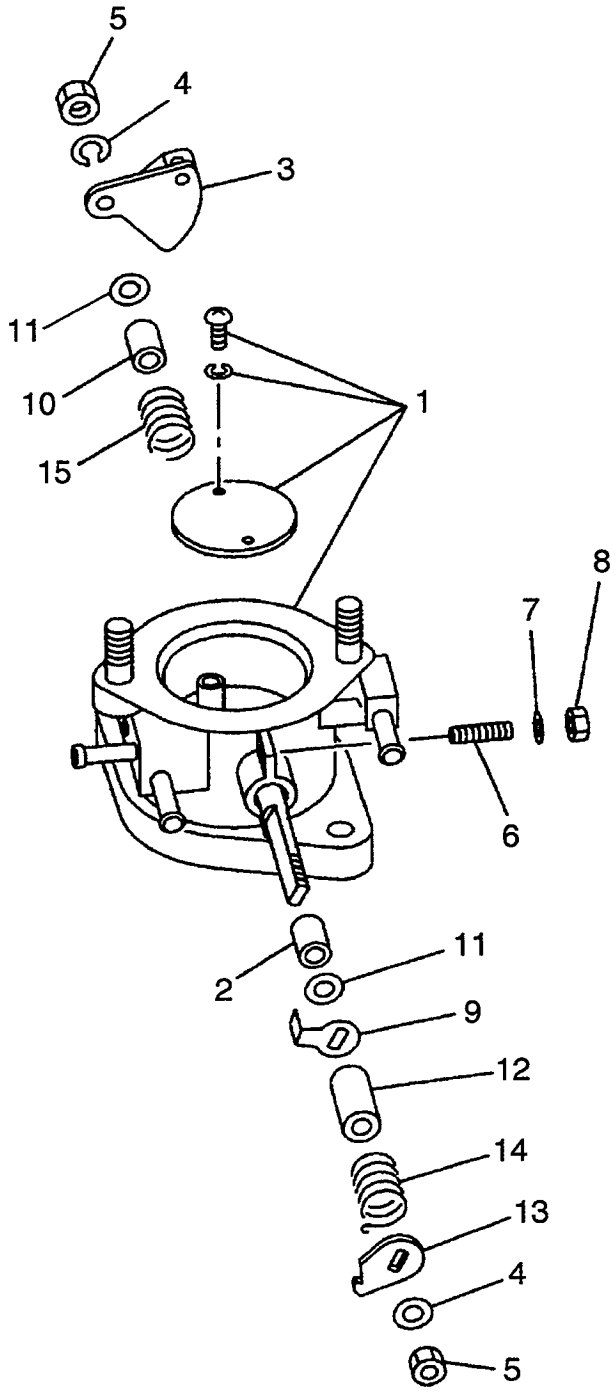

FIG. 10

A: C240PKJ D: C240PKJ-12
B: C240PKJ-06 E: C240PKJ-17
C: C240PKJ-11 F: C240PKJ-20

Item No. 見出番号	Part No. 部品番号	Mark 記号	Description 部品名称		Req'd 個数	Remarks : serial No. 備考：実施号車
A	Z-8-94323-746-0		THROTTLE VALVE ASSY	ｽﾛｯﾄﾙﾊﾞﾙﾌﾞｱｯｾﾝ	1	D
						INC.1-15
1	NO PART NO.		CASE	ｹｰｽ	1	D
2	NO PART NO.		BUSHING	ﾌﾞｯｼﾝｸﾞ	1	D
3	Z-5-14314-025-1		LEVER	ﾚﾊﾞｰ	1	D
4	Z-9-0915-0508-0		WASHER	ﾜｯｼｬ	2	D
5	Z-9-0911-0508-0		NUT	ﾅｯﾄ	2	D
6	Z-9-0602-3625-0		SCREW	ｽｸﾘｭ	2	D
7	02010-00006		WASHER	ﾜｯｼｬ	2	D
8	Z-9-0911-0506-0		NUT	ﾅｯﾄ	2	D
9	Z-5-14331-004-1		LEVER	ﾚﾊﾞｰ	1	D
10	Z-9-14319-023-0		COVER,DUST	ｶﾊﾞｰ	1	D
11	Z-9-0916-0508-0		WASHER	ﾜｯｼｬ	2	D
12	Z-5-14319-083-1		PIECE	ﾋﾟｰｽ	1	D
13	Z-5-14319-084-0		EYE	ｱｲ	1	D
14	Z-5-09585-015-0		SPRING	ｽﾌﾟﾘﾝｸﾞ	1	D
15	Z-5-09585-041-0		SPRING	ｽﾌﾟﾘﾝｸﾞ	1	D

FIG. 11 INTAKE SHUTTER (D)
インテークシャッタ

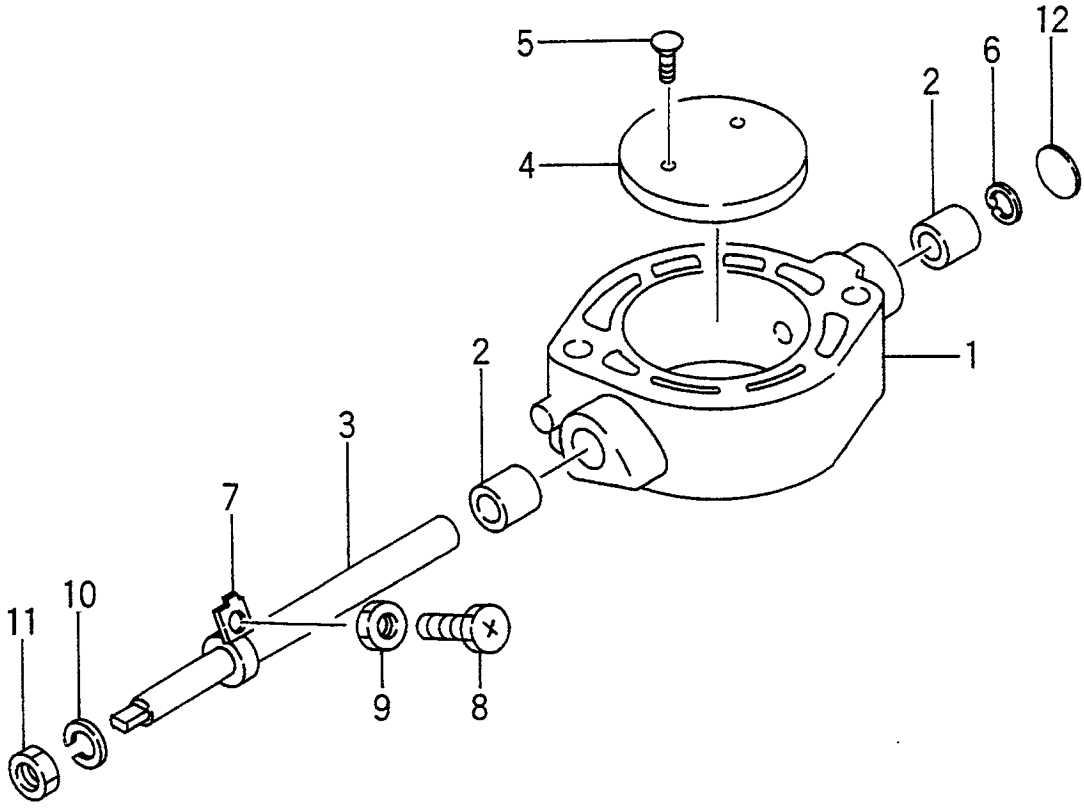

A: C240PKJ D: C240PKJ-12
B: C240PKJ-06 E: C240PKJ-17
C: C240PKJ-11 F: C240PKJ-20

FIG. 11

Item No. 見出番号	Part No. 部品番号	Mark 記号	Description 部品名称		Req'd 個数	Remarks : serial No. 備考：実施号車
A	Z-5-14310-360-1		INTAKE SHUTTER ASSY	ｲﾝﾃｰｸｼｬｯﾀｱｯｾﾝ	1	D
						INC.1-12
1	NO PART NO.		CASE	ｹｰｽ	1	D
2	Z-9-14319-326-0		BUSHING	ﾌﾞｯｼﾝｸﾞ	2	D
3	Z-5-14313-023-0		SHAFT	ｼｬﾌﾄ	1	D
4	NO PART NO.		VALVE,INTAKE SHUTTER	ﾊﾞﾙﾌﾞ	1	D
5	Z-9-9328-0308-0		SCREW	ｽｸﾘｭ	2	D
6	Z-9-0918-5412-0		RING,SNAP	ﾘﾝｸﾞ	1	D
7	Z-5-14331-003-0		STOPPER	ｽﾄｯﾊﾟ	1	D
8	Z-9-9349-0416-0		SCREW	ｽｸﾘｭ	2	D
9	Z-9-9911-1404-0		NUT	ﾅｯﾄ	2	D
10	Z-9-0915-0508-0		WASHER	ﾜｯｼｬ	1	D
11	01402-00008		NUT	ﾅｯﾄ	1	D
12	Z-5-14319-330-0		PLUG	ﾌﾟﾗｸﾞ	1	D

FIG. 12 OIL PUMP
オイルポンプ

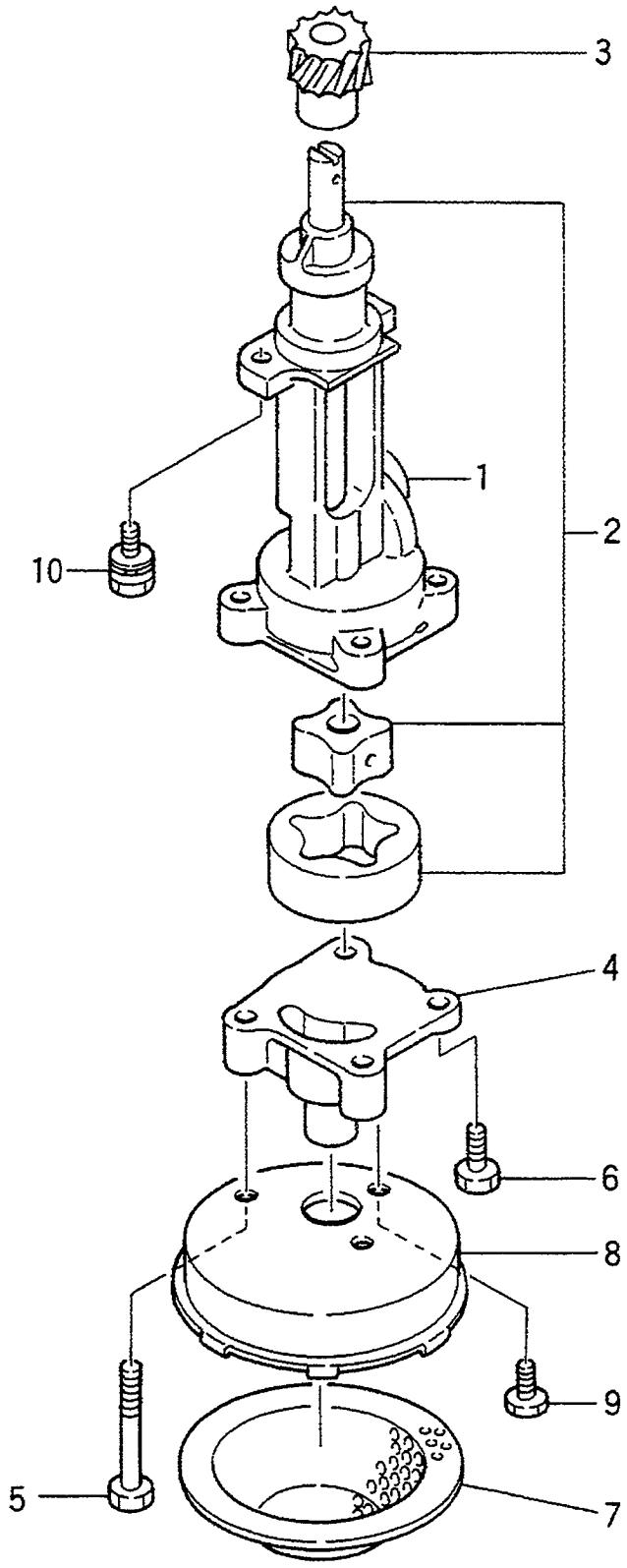

FIG. 12

A: C240PKJ D: C240PKJ-12
B: C240PKJ-06 E: C240PKJ-17
C: C240PKJ-11 F: C240PKJ-20

Item No. 見出番号	Part No. 部品番号	Mark 記号	Description 部品名称		Req'd 個数	Remarks : serial No. 備考：実施号車
A	Z-5-13100-126-3		OIL PUMP ASSY	ｵｲﾙﾎﾟﾝﾌﾟｱｯｾﾝ	1	INC.1-9
1	NO PART NO.		BODY	ﾎﾞﾃﾞｰ	1	
2	Z-8-97044-111-0		ROTOR	ﾛｰﾀ	1	INC.3
3	NO PART NO.		PINION	ﾋﾟﾆｵﾝ	1	
4	Z-9-13113-086-0		COVER	ｶﾊﾞｰ	1	
5	Z-5-09030-031-0		BOLT	ﾎﾞﾙﾄ	2	
6	Z-0-5004-0825-1		BOLT&WASHER	ﾎﾞﾙﾄ&ﾜｯｼｬ	4	
7	Z-9-13143-603-1		GAUZE	ｶﾞｰｾﾞ	1	
8	Z-5-13141-014-0		CASE	ｹｰｽ	1	
9	Z-0-2080-0812-0		BOLT	ﾎﾞﾙﾄ	1	
10	Z-0-5014-0825-0		BOLT&WASHER	ﾎﾞﾙﾄ&ﾜｯｼｬ	2	

FIG. 13 OIL FILTER
オイルフィルタ

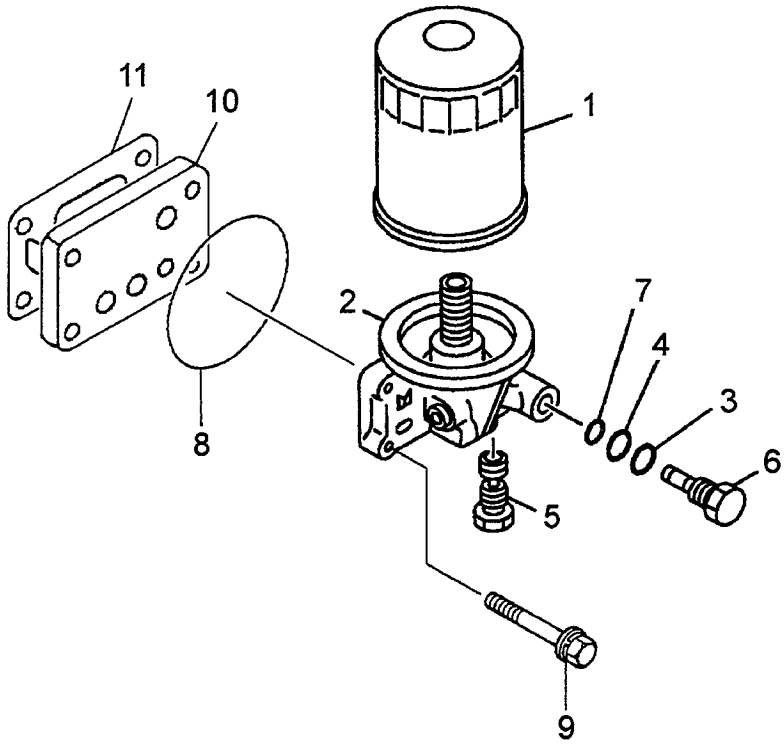

FIG. 13

A: C240PKJ D: C240PKJ-12
B: C240PKJ-06 E: C240PKJ-17
C: C240PKJ-11 F: C240PKJ-20

Item No. 見出番号	Part No. 部品番号	Mark 記号	Description 部品名称		Req'd 個数	Remarks : serial No. 備考：実施号車
A	Z-8-94462-137-1		OIL FILTER ASSY	ｵｲﾙﾌｨﾙﾀｱｯｾﾝ	1	INC.1-7
1	20801-01271		CARTRIDGE	ｶｰﾄﾘｯｼﾞ	1	INC.5,6,11
2	Z-8-94329-622-0		BODY	ﾎﾞﾃﾞｰ	1	
3	Z-8-94167-884-0		O RING	Oﾘﾝｸﾞ	1	
4	Z-8-94167-885-0		O RING	Oﾘﾝｸﾞ	1	
5	Z-8-94167-882-0		VALVE,RELIEF	ﾊﾞﾙﾌﾞ	1	
6	Z-8-94167-883-0		PLUG	ﾌﾟﾗｸﾞ	1	
7	Z-8-94167-886-0		O RING	Oﾘﾝｸﾞ	1	
S	Z-5-87811-341-1		GASKET SET	ｶﾞｽｹｯﾄｾｯﾄ	1	A,B,D,E INC.8 & etc.
-	Z-5-87811-339-1		GASKET SET	ｶﾞｽｹｯﾄｾｯﾄ	1	C INC.8 & etc.
-	Z-5-87812-644-1		GASKET SET	ｶﾞｽｹｯﾄｾｯﾄ	1	F INC.8 & etc.
8	Z-8-94425-298-0	*	PACKING	ﾊﾟｯｷﾝｸﾞ	1	
9	Z-0-2868-0830-0		BOLT	ﾎﾞﾙﾄ	4	
10	Z-9-13226-009-0		ADAPTER	ｱﾀﾞﾌﾟﾀ	1	
11	Z-9-09920-620-0		GASKET	ｶﾞｽｹｯﾄ	1	

FIG. 14 OIL PIPE
オイルパイプ

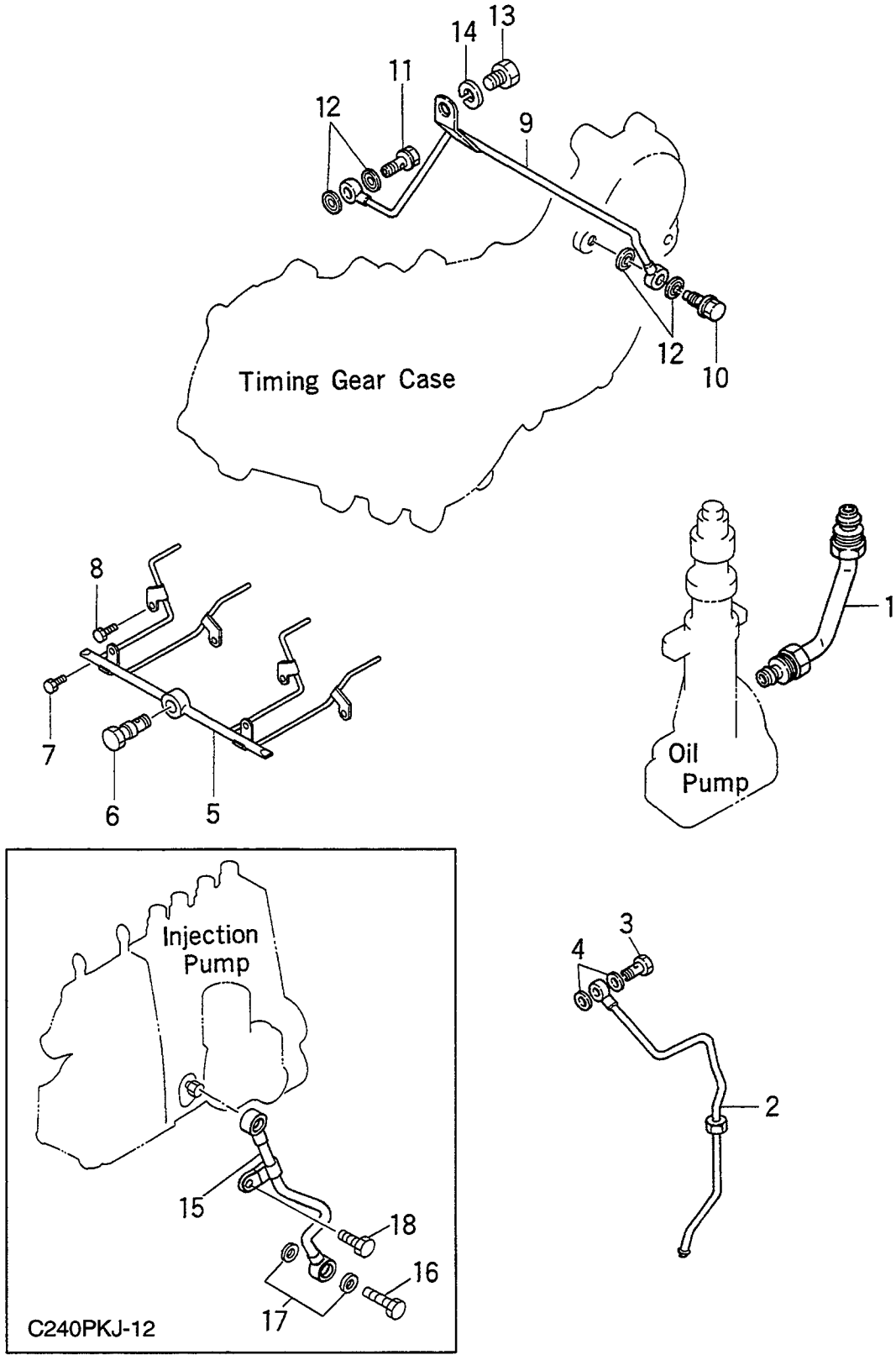

FIG. 14

A: C240PKJ D: C240PKJ-12
B: C240PKJ-06 E: C240PKJ-17
C: C240PKJ-11 F: C240PKJ-20

Item No. 見出番号	Part No. 部品番号	Mark 記号	Description 部品名称		Req'd 個数	Remarks : serial No. 備考：実施号車
1	Z-8-94454-852-0		PIPE	ﾊﾟｲﾌﾟ	1	
2	Z-5-13311-114-1		PIPE	ﾊﾟｲﾌﾟ	1	
3	Z-1-09675-037-1		BOLT,EYE	ﾎﾞﾙﾄ	1	
S	Z-5-87811-341-1		GASKET SET	ｶﾞｽｹｯﾄｾｯﾄ	1	A,B,D,E
						INC.4,12,17 & etc.
-	Z-5-87811-339-1		GASKET SET	ｶﾞｽｹｯﾄｾｯﾄ	1	C
						INC.4,12 & etc.
-	Z-5-87812-644-1		GASKET SET	ｶﾞｽｹｯﾄｾｯﾄ	1	F
						INC.4,12 & etc.
4	Z-1-09630-082-0	*	PACKING	ﾊﾟｯｷﾝｸﾞ	2	
5	Z-8-94470-550-2		PIPE	ﾊﾟｲﾌﾟ	1	
6	Z-8-97145-612-0		VALVE	ﾊﾞﾙﾌﾞ	1	-2001.7
-	Z-8-97311-976-0		VALVE	ﾊﾞﾙﾌﾞ	1	2001.8-
7	Z-0-2808-0810-0		BOLT	ﾎﾞﾙﾄ	2	
8	Z-0-2808-0620-0		BOLT	ﾎﾞﾙﾄ	4	
9	Z-5-13311-222-1		PIPE	ﾊﾟｲﾌﾟ	1	
10	Z-5-09675-032-1		BOLT,EYE	ﾎﾞﾙﾄ	1	
11	Z-5-09675-018-1		BOLT,EYE	ﾎﾞﾙﾄ	1	
12	Z-9-0957-2008-0	*	PACKING	ﾊﾟｯｷﾝｸﾞ	4	
13	Z-0-2080-1014-0		BOLT	ﾎﾞﾙﾄ	1	
14	Z-9-0915-0510-0		WASHER	ﾜｯｼｬ	1	
15	Z-5-13311-174-0		PIPE	ﾊﾟｲﾌﾟ	1	D
16	Z-5-09675-022-0		BOLT,EYE	ﾎﾞﾙﾄ	1	D
17	Z-9-0957-2008-0	*	PACKING	ﾊﾟｯｷﾝｸﾞ	2	D
18	Z-0-5004-0612-0		BOLT	ﾎﾞﾙﾄ	1	D

FIG. 15 COOLING SYSTEM
クーリング゛システム

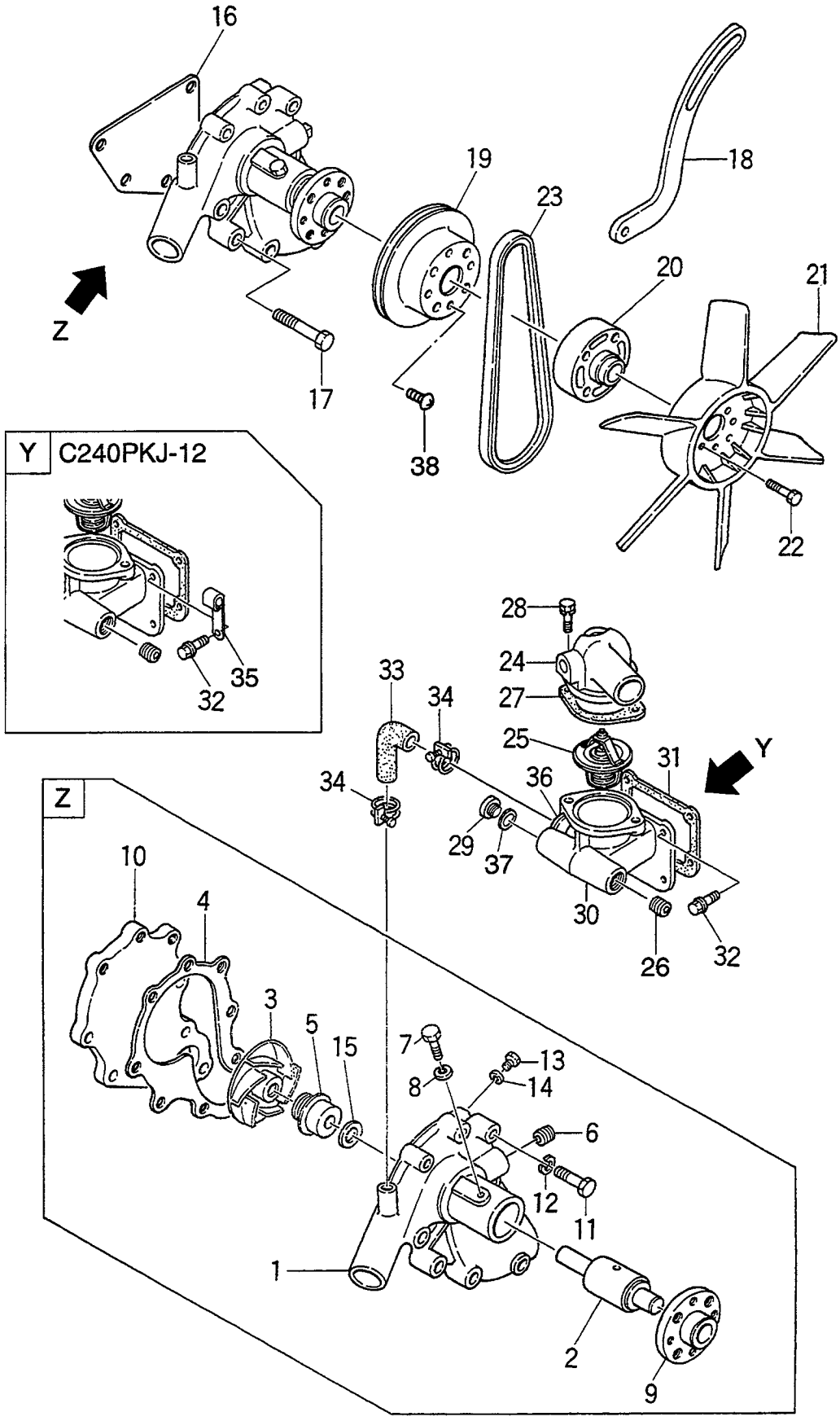

FIG. 15

A: C240PKJ D: C240PKJ-12
B: C240PKJ-06 E: C240PKJ-17
C: C240PKJ-11 F: C240PKJ-20

Item No. 見出番号	Part No. 部品番号	Mark 記号	Description 部品名称		Req'd 個数	Remarks : serial No. 備考：実施号車
A	Z-8-94376-863-0		WATER PUMP ASSY	ｳｫｰﾀｰﾎﾟﾝﾌﾟｱｯｾﾝ	1	INC.1-16
1	NO PART NO.		BODY	ﾎﾞﾃﾞｰ	1	
K	Z-8-94377-355-0		REPAIR KIT	ﾘﾍﾟｱｷｯﾄ	1	INC.2-5,9,15
2	Z-8-94110-560-0	*	BEARING	ﾍﾞｱﾘﾝｸﾞ	1	
3	Z-8-94114-727-0	*	WHEEL,IMPELLER	ﾎｲｰﾙ	1	
4	Z-8-94311-814-0	*	PACKING	ﾊﾟｯｷﾝｸﾞ	1	
5	Z-8-94422-326-0	*	SEAL UNIT	ｼｰﾙﾕﾆｯﾄ	1	
6	Z-5-09605-005-0		PLUG,HEATER	ﾌﾟﾗｸﾞ	1	
7	Z-5-09814-001-0		SCREW SET	ｽｸﾘｭｾｯﾄ	1	
8	Z-9-0915-0508-0		WASHER	ﾜｯｼｬ	1	
9	Z-5-13642-064-0	*	CENTER,FAN	ｾﾝﾀ	1	
10	Z-8-94311-600-0		COVER	ｶﾊﾞｰ	1	
11	Z-9-0190-0835-0		BOLT	ﾎﾞﾙﾄ	3	
12	Z-9-0915-0508-0		WASHER	ﾜｯｼｬ	3	
13	Z-9-09862-042-0		PLUG	ﾌﾟﾗｸﾞ	1	
14	Z-9-0957-1106-0		PACKING	ﾊﾟｯｷﾝｸﾞ	1	
15	Z-9-13639-001-0	*	THROWER	ｽﾛﾜ	1	
S1	Z-5-87811-341-1		GASKET SET	ｶﾞｽｹｯﾄｾｯﾄ	1	A,B,D,E
						INC.16,27,31 & etc.
-	Z-5-87811-339-1		GASKET SET	ｶﾞｽｹｯﾄｾｯﾄ	1	C
						INC.16,27,31 & etc.
-	Z-5-87812-644-1		GASKET SET	ｶﾞｽｹｯﾄｾｯﾄ	1	F
						INC.16,27,31 & etc.
16	Z-9-13614-043-0	*	PACKING	ﾊﾟｯｷﾝｸﾞ	1	
17	Z-0-5004-1060-0		BOLT	ﾎﾞﾙﾄ	1	
-	Z-5-09030-024-1		BOLT	ﾎﾞﾙﾄ	1	
-	Z-0-2808-1050-0		BOLT	ﾎﾞﾙﾄ	4	
18	Z-8-94404-350-0		PLATE	ﾌﾟﾚｰﾄ	1	
19	Z-5-13641-045-3		PULLEY	ﾌﾟｰﾘ	1	A,C,D,F
-	Z-5-13641-043-4		PULLEY	ﾌﾟｰﾘ	1	B
-	211L2-10031		PULLEY	ﾌﾟｰﾘ	1	E
20	Z-9-13642-076-1		SPACER	ｽﾍﾟｰｻ	1	-2000.6
-	Z-8-97063-400-3		SPACER	ｽﾍﾟｰｻ	1	2000.7-
21	Z-8-94470-553-0		FAN	ﾌｧﾝ	1	
22	Z-0-5004-0822-0		BOLT&WASHER	ﾎﾞﾙﾄ&ﾜｯｼｬ	4	-2000.6
-	Z-0-5004-0820-0		BOLT	ﾎﾞﾙﾄ	4	2000.7-
23	20801-04091		BELT,FAN	ﾍﾞﾙﾄ	1	A,C,D,E,F
-	20801-04081		BELT,FAN	ﾍﾞﾙﾄ	1	B
24	Z-5-13713-030-0		PIPE	ﾊﾟｲﾌﾟ	1	
25	Z-5-13770-021-1		THERMOSTAT	ｻｰﾓｽﾀｯﾄ	1	
26	Z-5-09605-005-0		PLUG,HEATER	ﾌﾟﾗｸﾞ	1	
27	Z-8-94365-674-2	*	PACKING	ﾊﾟｯｷﾝｸﾞ	1	-2002.3
-	Z-8-97264-690-1	*	PACKING	ﾊﾟｯｷﾝｸﾞ	1	2002.4-
28	Z-0-2868-0830-0		BOLT	ﾎﾞﾙﾄ	2	
29	Z-9-09961-005-0		PLUG	ﾌﾟﾗｸﾞ	1	
30	Z-5-13716-019-0		HOUSING	ﾊｳｼﾞﾝｸﾞ	1	
S2	Z-5-87813-019-1		GASKET SET,HEAD	ｶﾞｽｹｯﾄｾｯﾄ	1	INC.31 & etc.
31	Z-8-97113-741-0	*	PACKING	ﾊﾟｯｷﾝｸﾞ	1	-1999.10
-	Z-8-97229-471-0	*	PACKING	ﾊﾟｯｷﾝｸﾞ	1	1999.11-
32	Z-0-2808-0820-0		BOLT	ﾎﾞﾙﾄ	2	A,B,C,E,F

FIG. 15 COOLING SYSTEM
クーリング゛システム

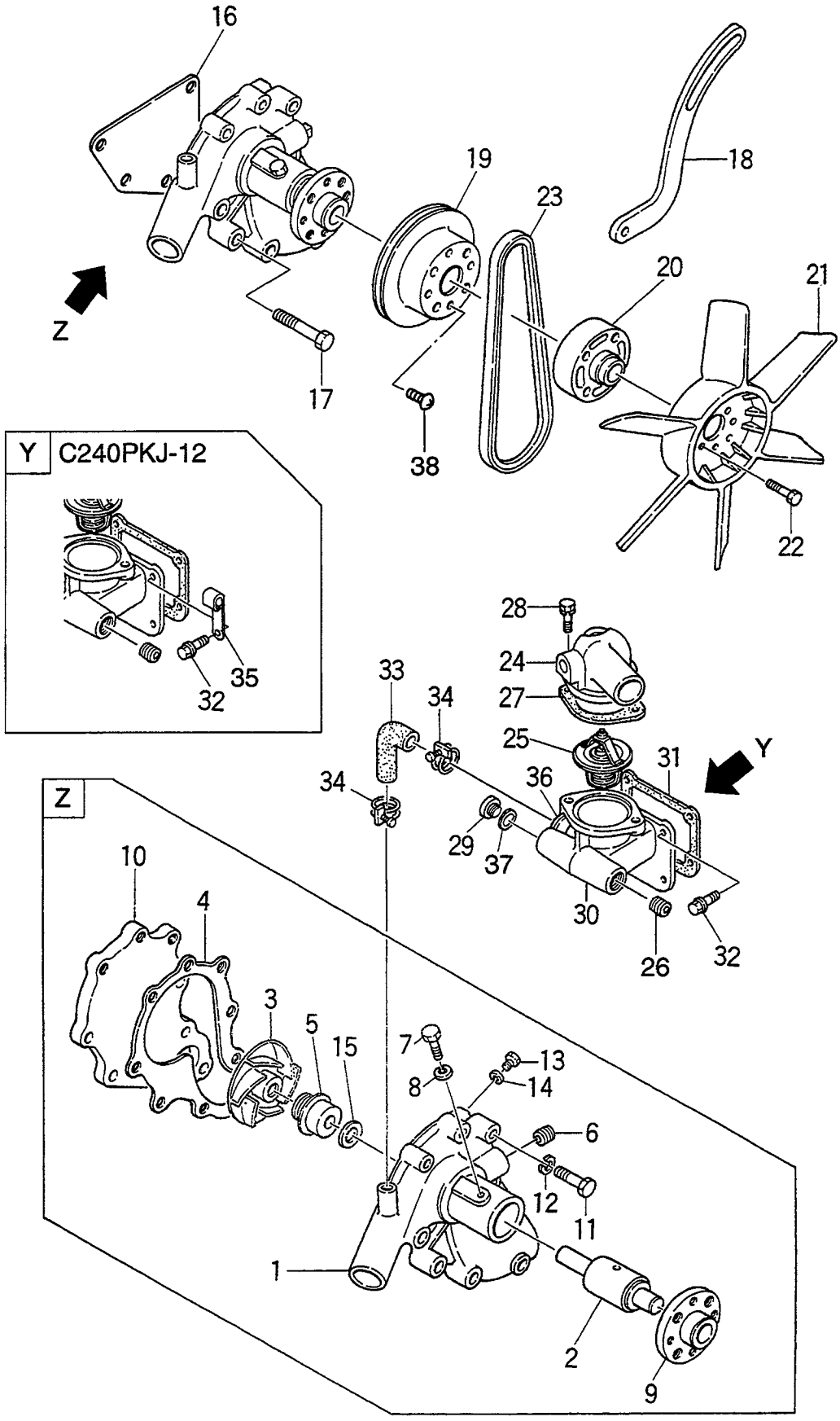

FIG. 15

A: C240PKJ D: C240PKJ-12
B: C240PKJ-06 E: C240PKJ-17
C: C240PKJ-11 F: C240PKJ-20

Item No. 見出番号	Part No. 部品番号	Mark 記号	Description 部品名称		Req'd 個数	Remarks : serial No. 備考：実施号車
32	Z-0-2868-0820-0		BOLT	ﾎﾞﾙﾄ	2	A,B,C,E,F
-	Z-0-2868-0820-0		BOLT	ﾎﾞﾙﾄ	1	D
-	Z-0-2808-0820-0		BOLT	ﾎﾞﾙﾄ	3	D
33	Z-5-09361-167-0		HOSE	ﾎｰｽ	1	
34	Z-9-09915-644-2		CLIP	ｸﾘｯﾌﾟ	2	
35	Z-9-09916-275-0		CLIP	ｸﾘｯﾌﾟ	1	D
36	Z-5-13719-047-0		PIPE,BY PASS	ﾊﾟｲﾌﾟ	1	
37	Z-9-0957-1316-0		GASKET	ｶﾞｽｹｯﾄ	1	
38	Z-0-2080-0612-0		SCREW	ｽｸﾘｭ	2	

FIG. 16 FUEL SYSTEM (A,B,C,E,F)
フューエルシステム

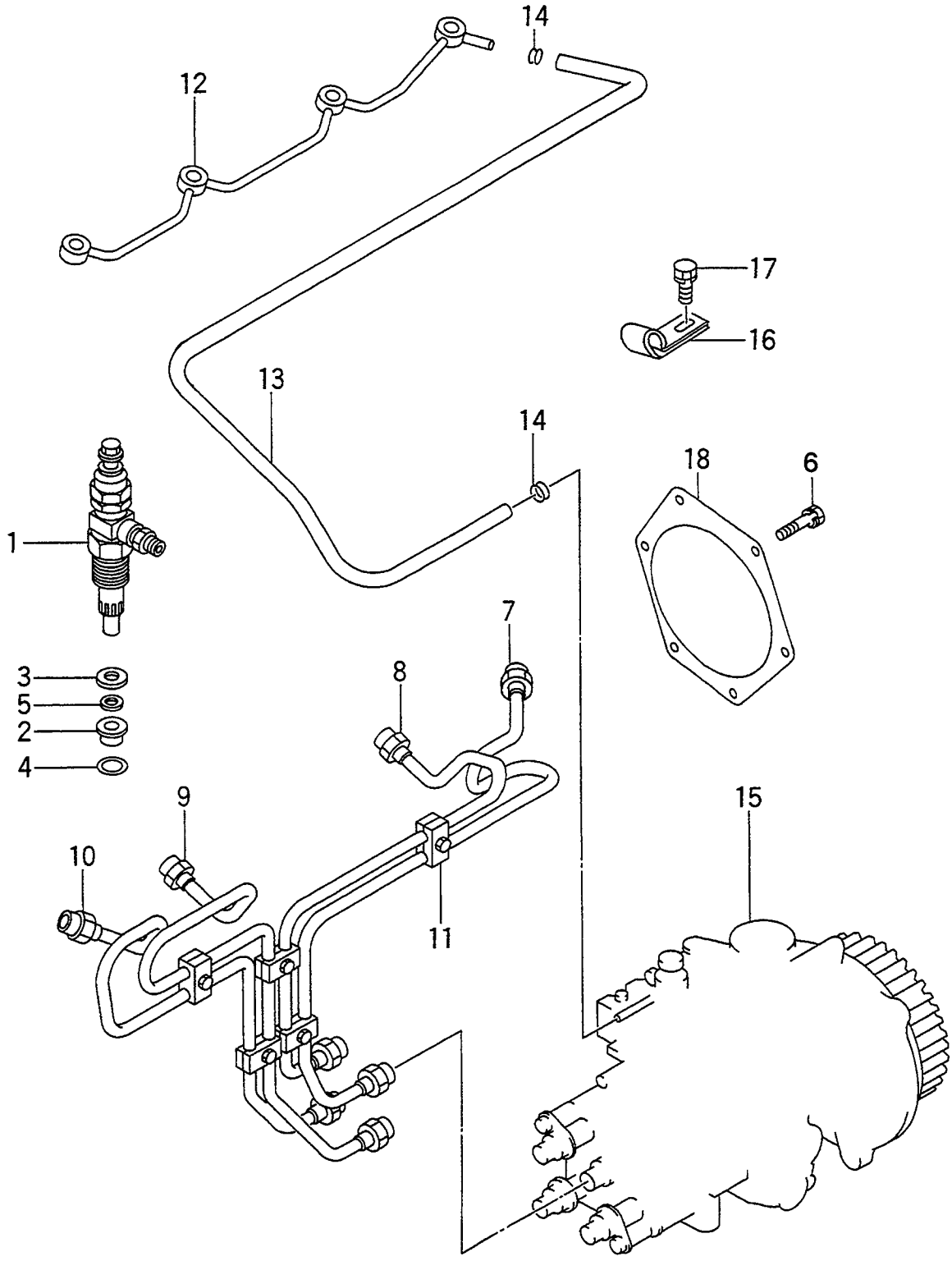

FIG. 16

A: C240PKJ D: C240PKJ-12
B: C240PKJ-06 E: C240PKJ-17
C: C240PKJ-11 F: C240PKJ-20

Item No. 見出番号	Part No. 部品番号	Mark 記号	Description 部品名称		Req'd 個数	Remarks : serial No. 備考：実施号車
1	Z-5-15300-039-1		NOZZLE	ﾉｽﾞﾙ	4	A,B,C,E,F
						SEE FIG.18
2	Z-9-15315-027-0		SHIELD,HEAT	ｼｰﾙﾄﾞ	4	A,B,C,E,F
S1	Z-5-87811-341-1		GASKET SET	ｶﾞｽｹｯﾄｾｯﾄ	1	A,B,E
						INC.3,5,18 & etc.
-	Z-5-87811-339-1		GASKET SET	ｶﾞｽｹｯﾄｾｯﾄ	1	C
						INC.3,5,18 & etc.
-	Z-5-87812-644-1		GASKET SET	ｶﾞｽｹｯﾄｾｯﾄ	1	F
						INC.3,5,18 & etc.
S2	Z-5-87813-019-1		GASKET SET,HEAD	ｶﾞｽｹｯﾄｾｯﾄ	1	A,B,C,E,F
						INC.3,5 & etc.
3	Z-9-15315-026-0	*	WASHER	ﾜｯｼｬ	4	A,B,C,E,F
4	Z-9-15315-028-0		WASHER	ﾜｯｼｬ	4	A,B,C,E,F
5	Z-9-15315-074-0	*	WASHER	ﾜｯｼｬ	4	A,B,C,E,F
6	Z-1-09044-073-0		BOLT	ﾎﾞﾙﾄ	4	A,B,C,E,F
-	Z-0-2808-0845-0		BOLT	ﾎﾞﾙﾄ	4	A,B,C,E,F
7	Z-8-94470-556-1		PIPE,NO.1	ﾊﾟｲﾌﾟ	1	A,B,C,E,F
8	Z-8-94470-557-1		PIPE,NO.2	ﾊﾟｲﾌﾟ	1	A,B,C,E,F
9	Z-8-94470-558-2		PIPE,NO.3	ﾊﾟｲﾌﾟ	1	A,B,C,E,F
10	Z-8-94470-559-2		PIPE,NO.4	ﾊﾟｲﾌﾟ	1	A,B,C,E,F
11	Z-5-15419-013-1		CLIP	ｸﾘｯﾌﾟ	5	A,B,C,E,F
12	Z-8-94250-310-0		PIPE	ﾊﾟｲﾌﾟ	1	A,B,C,E,F
13	Z-0-0125-4300-0		HOSE	ﾎｰｽ	1	A,B,C,E,F
14	Z-9-0952-5536-0		CLIP	ｸﾘｯﾌﾟ	2	A,B,C,E,F
15	Z-8-97136-683-1		INJECTION PUMP	ｲﾝｼﾞｪｸｼｮﾝﾎﾟﾝﾌﾟ	1	A,B,C,F
						SEE FIG.19
-	Z-8-97220-742-0		INJECTION PUMP	ｲﾝｼﾞｪｸｼｮﾝﾎﾟﾝﾌﾟ	1	E
						SEE FIG.19
16	Z-8-94238-610-0		CLIP	ｸﾘｯﾌﾟ	1	A,B,C,E,F
17	Z-0-2808-0812-0		BOLT	ﾎﾞﾙﾄ	1	A,B,C,E,F
18	Z-8-97113-745-0	*	PACKING	ﾊﾟｯｷﾝｸﾞ	1	A,B,C,E,F

FIG. 17 FUEL SYSTEM (D)
フューエルシステム

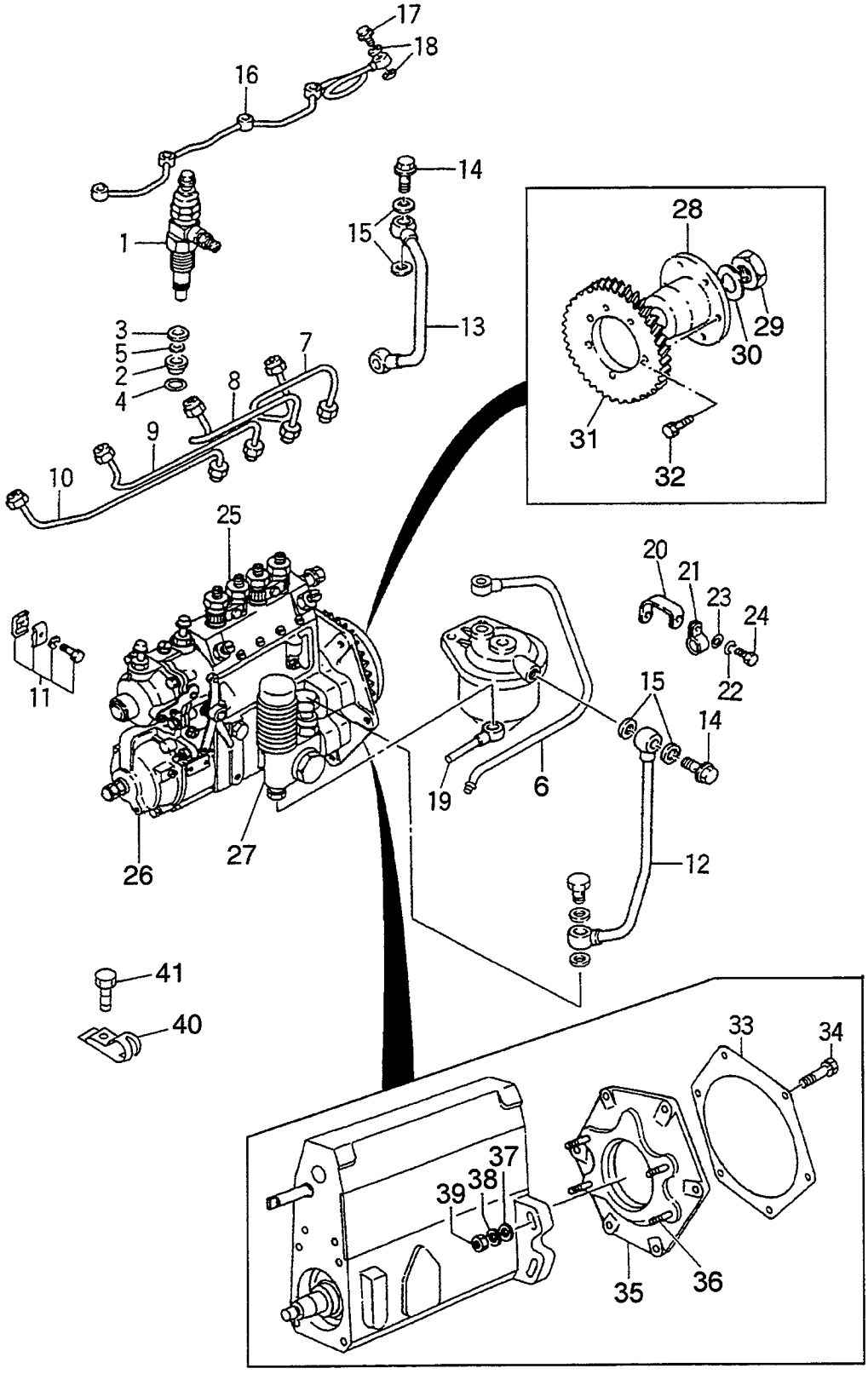

FIG. 17

A: C240PKJ D: C240PKJ-12
B: C240PKJ-06 E: C240PKJ-17
C: C240PKJ-11 F: C240PKJ-20

Item No. 見出番号	Part No. 部品番号	Mark 記号	Description 部品名称		Req'd 個数	Remarks : serial No. 備考：実施号車
1	Z-5-15300-039-1		NOZZLE	ﾉｽﾞﾙ	4	D
						SEE FIG.18
2	Z-9-15315-027-0		SHIELD,HEAT	ｼｰﾙﾄﾞ	4	D
S1	Z-5-87811-341-1		GASKET SET	ｶﾞｽｹｯﾄｾｯﾄ	1	D
						INC.3,5,15,18,33 & etc.
S2	Z-5-87813-019-1		GASKET SET,HEAD	ｶﾞｽｹｯﾄｾｯﾄ	1	D
						INC.3,5,18 & etc.
3	Z-9-15315-026-0	*	WASHER	ﾜｯｼｬ	4	D
4	Z-9-15315-028-0		WASHER	ﾜｯｼｬ	4	D
5	Z-9-15315-074-0	*	WASHER	ﾜｯｼｬ	4	D
6	Z-5-15411-092-0		PIPE	ﾊﾟｲﾌﾟ	1	D
7	Z-5-15411-216-1		PIPE,NO.1	ﾊﾟｲﾌﾟ	1	D
8	Z-5-15411-217-1		PIPE,NO.2	ﾊﾟｲﾌﾟ	1	D
9	Z-5-15411-218-1		PIPE,NO.3	ﾊﾟｲﾌﾟ	1	D
10	Z-5-15411-219-2		PIPE,NO.4	ﾊﾟｲﾌﾟ	1	D
11	Z-9-15419-072-1		CLIP	ｸﾘｯﾌﾟ	3	D
12	Z-8-94402-626-0		PIPE	ﾊﾟｲﾌﾟ	1	D
13	Z-8-94402-627-0		PIPE	ﾊﾟｲﾌﾟ	1	D
14	Z-9-09906-325-1		BOLT,EYE	ﾎﾞﾙﾄ	2	D
15	Z-9-0957-2014-0	*	PACKING	ﾊﾟｯｷﾝｸﾞ	4	D
16	Z-5-15411-774-0		PIPE	ﾊﾟｲﾌﾟ	1	D
17	Z-9-09906-314-1		BOLT,EYE	ﾎﾞﾙﾄ	1	D
18	Z-9-0957-1408-0	*	PACKING	ﾊﾟｯｷﾝｸﾞ	2	D
19	Z-5-15411-223-1		JOINT,EYE	ｼﾞｮｲﾝﾄ	1	D
20	Z-5-15419-007-0		STAY	ｽﾃｰ	1	D
21	Z-9-0952-5032-0		CLIP	ｸﾘｯﾌﾟ	1	D
22	02010-00006		WASHER	ﾜｯｼｬ	1	D
23	Z-9-0916-0506-0		WASHER	ﾜｯｼｬ	1	D
24	Z-0-2080-0614-0		BOLT	ﾎﾞﾙﾄ	1	D
25	Z-8-97148-875-0		INJECTION PUMP	ｲﾝｼﾞｪｸｼｮﾝﾎﾟﾝﾌﾟ	1	D
						INC.26-32
						SEE FIG.21
26	Z-8-97185-635-0		GOVERNOR		1	D
						SEE FIG.22
27	Z-8-94178-843-0		FEED PUMP		1	D
						SEE FIG.23
A	Z-8-94368-234-0		COUPLING ASSY	ｶｯﾌﾟﾘﾝｸﾞｱｯｾﾝ	1	D
						INC.28-32
28	Z-5-15781-002-0		COUPLING	ｶｯﾌﾟﾘﾝｸﾞ	1	D
29	Z-5-15619-047-0		NUT	ﾅｯﾄ	1	D
30	Z-9-0915-0512-0		WASHER	ﾜｯｼｬ	1	D
31	Z-5-12524-067-0		GEAR	ｷﾞﾔｰ	1	D
32	Z-5-15789-021-0		BOLT	ﾎﾞﾙﾄ	6	D
33	Z-8-97113-745-0	*	PACKING	ﾊﾟｯｷﾝｸﾞ	1	D
34	Z-1-09044-073-0		BOLT	ﾎﾞﾙﾄ	4	D
-	Z-0-2808-0845-0		BOLT	ﾎﾞﾙﾄ	4	D
35	Z-9-19751-079-0		BRACKET	ﾌﾞﾗｹｯﾄ	1	D
						INC.36
36	Z-9-0410-1030-0		STUD	ｽﾀｯﾄﾞ	4	D
37	Z-9-0916-4510-0		WASHER	ﾜｯｼｬ	4	D

FIG. 17 FUEL SYSTEM (D)
フューエルシステム

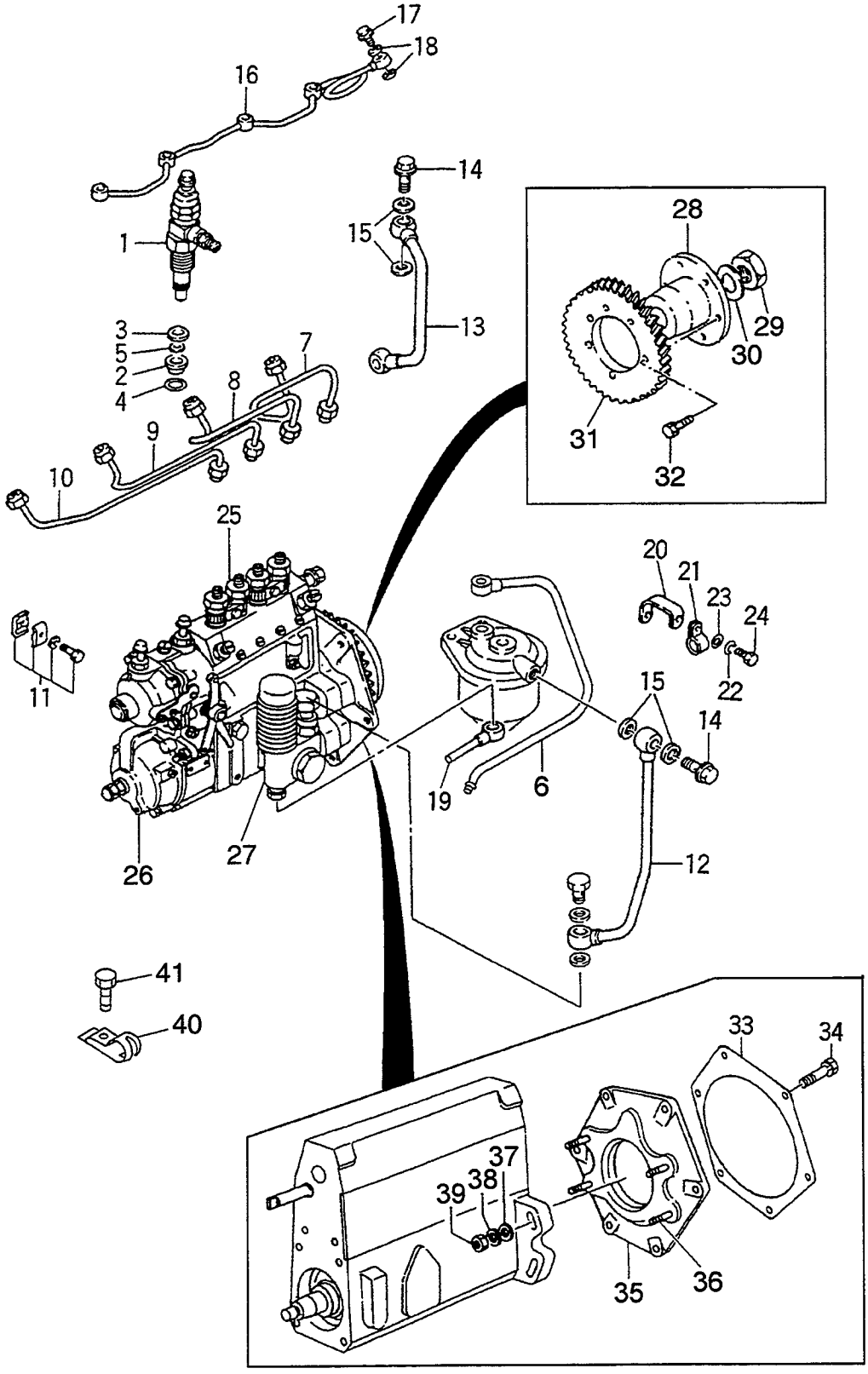

FIG. 17

A: C240PKJ
B: C240PKJ-06
C: C240PKJ-11
D: C240PKJ-12
E: C240PKJ-17
F: C240PKJ-20

Item No. 見出番号	Part No. 部品番号	Mark 記号	Description 部品名称		Req'd 個数	Remarks : serial No. 備考：実施号車
38	Z-9-0915-0610-0		WASHER	ﾜｯｼｬ	4	D
39	Z-5-15639-002-0		NUT	ﾅｯﾄ	4	D
40	Z-5-14335-006-0		CLIP	ｸﾘｯﾌﾟ	2	D
41	Z-9-9349-0412-0		SCREW	ｽｸﾘｭ	2	D

FIG. 18 NOZZLE
ﾉｽﾞﾙ

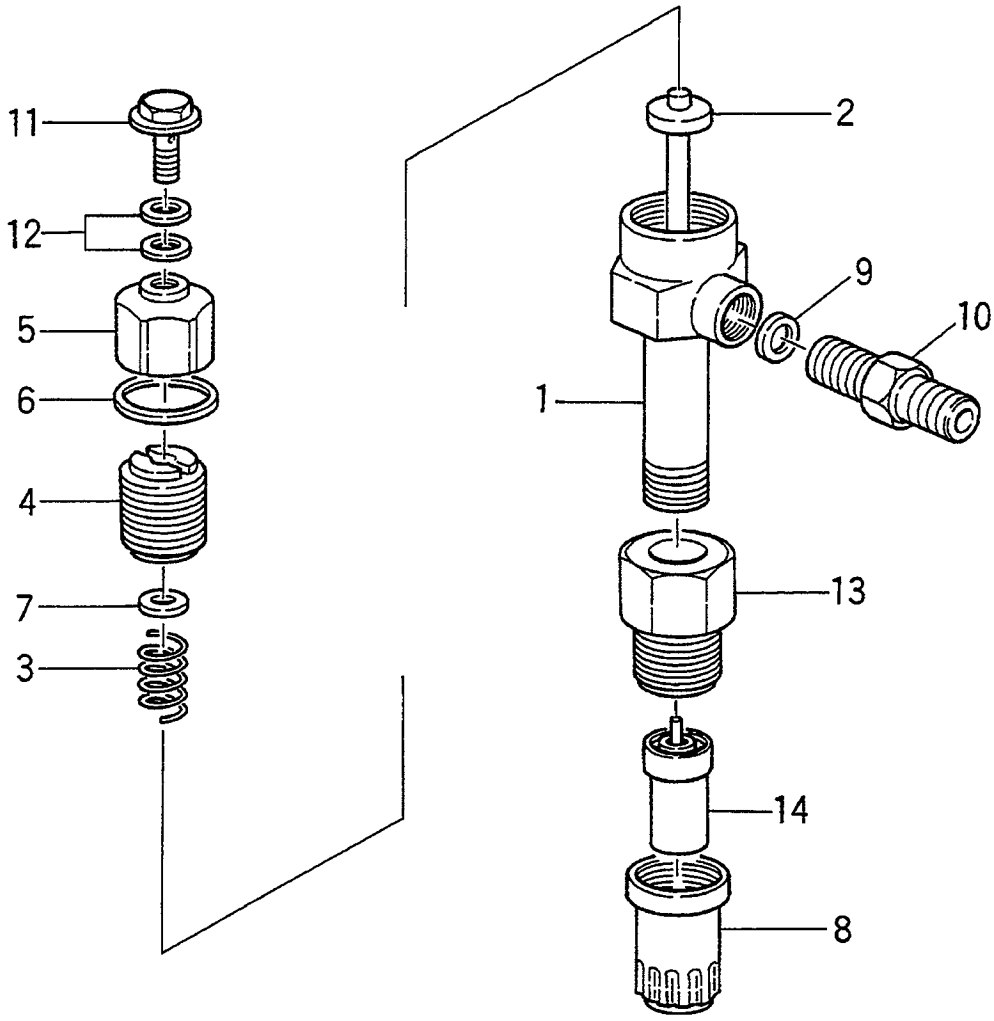

FIG. 18

A: C240PKJ D: C240PKJ-12
B: C240PKJ-06 E: C240PKJ-17
C: C240PKJ-11 F: C240PKJ-20

Item No. 見出番号	Part No. 部品番号	Mark 記号	Description 部品名称		Req'd 個数	Remarks : serial No. 備考：実施号車
A	Z-5-15300-039-1		NOZZLE ASSY	ﾉｽﾞﾙｱｯｾﾝ	4	INC.1-14
1	Z-8-94114-515-0		HOLDER	ﾎﾙﾀﾞ	4	INC.2-13
2	Z-5-15341-002-0		ROD,PUSH	ﾛｯﾄﾞ	4	
3	Z-5-15343-002-0		SPRING	ｽﾌﾟﾘﾝｸﾞ	4	
4	Z-9-15339-601-0		SCREW	ｽｸﾘｭ	4	
5	Z-5-15334-003-0		NUT	ﾅｯﾄ	4	
6	Z-9-15339-056-0		GASKET	ｶﾞｽｹｯﾄ	4	
7	Z-9-15339-057-0		WASHER	ﾜｯｼｬ	4	
8	Z-9-15332-603-0		NUT	ﾅｯﾄ	4	
9	Z-9-15352-005-0		GASKET	ｶﾞｽｹｯﾄ	4	
10	Z-9-15351-007-0		JOINT	ｼﾞｮｲﾝﾄ	4	
11	Z-1-09675-139-0		BOLT,EYE	ﾎﾞﾙﾄ	4	
12	Z-9-0957-1408-0		PACKING	ﾊﾟｯｷﾝｸﾞ	8	
13	Z-9-15359-601-0		SCREW	ｽｸﾘｭ	4	
14	Z-5-15311-006-0		NOZZLE	ﾉｽﾞﾙ	4	

FIG. 19 INJECTION PUMP (1/2)(A,B,C,E,F)
ｲﾝｼﾞｪｸｼｮﾝﾎﾟﾝﾌﾟ

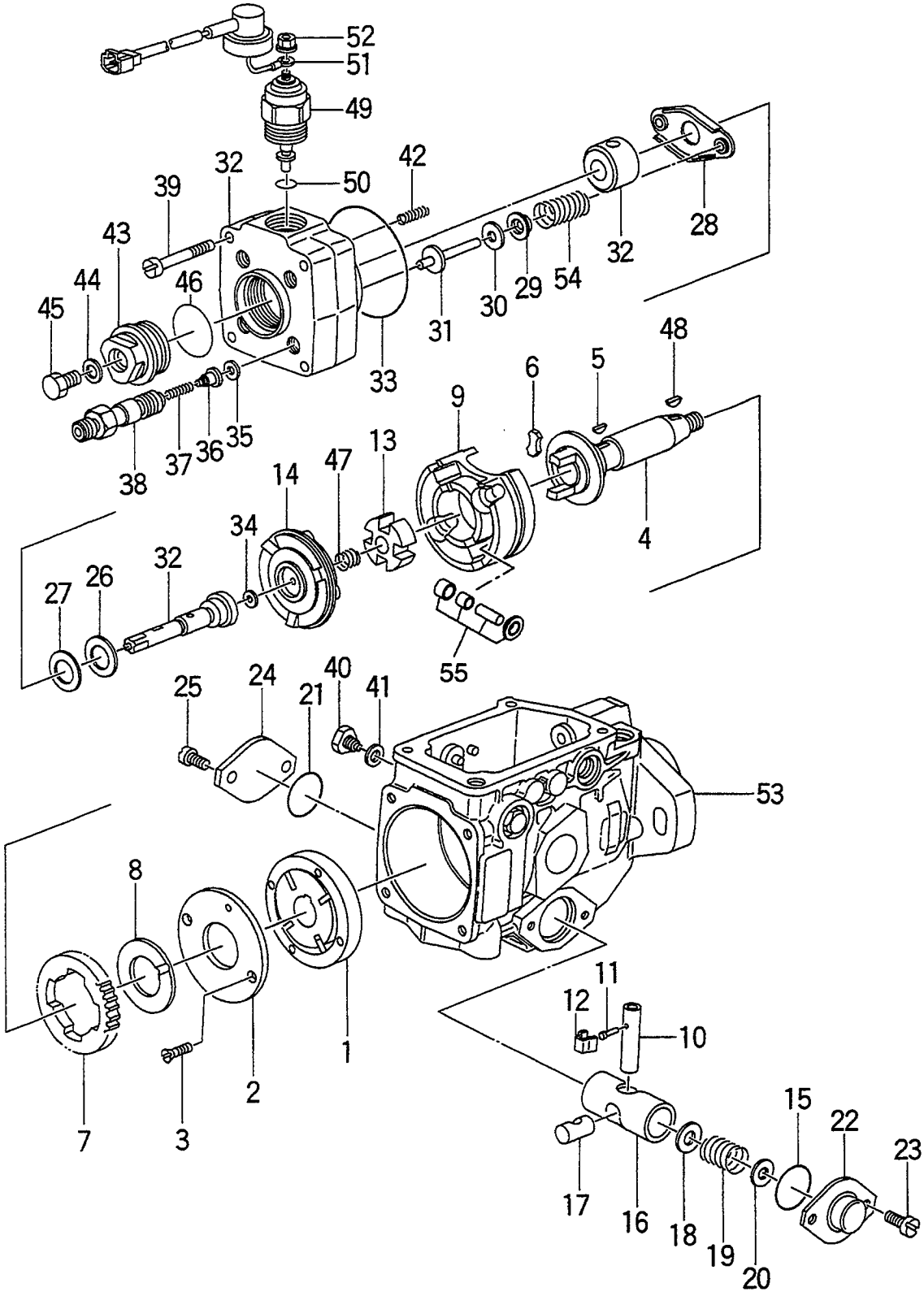

FIG. 19

A: C240PKJ D: C240PKJ-12
B: C240PKJ-06 E: C240PKJ-17
C: C240PKJ-11 F: C240PKJ-20

Item No. 見出番号	Part No. 部品番号	Mark 記号	Description 部品名称		Req'd 個数	Remarks : serial No. 備考：実施号車
A1	Z-8-97136-683-1		INJECTION PUMP ASSY	ｲﾝｼﾞｪｸｼｮﾝﾎﾟﾝﾌﾟ ｱｯｾﾝ	1	A,B,C,F INC.1-54 & FIG.20
-	Z-8-97136-683-1		INJECTION PUMP ASSY	ｲﾝｼﾞｪｸｼｮﾝﾎﾟﾝﾌﾟ ｱｯｾﾝ	1	E INC.1-54 & FIG.20 -1999.5
-	Z-8-97220-742-0		INJECTION PUMP ASSY	ｲﾝｼﾞｪｸｼｮﾝﾎﾟﾝﾌﾟ ｱｯｾﾝ	1	E INC.1-55 & FIG.20 1999.6-
1	Z-8-94227-477-0		PUMP,FEED	ﾎﾟﾝﾌﾟ	1	A,B,C,E,F
2	Z-8-94227-478-0		COVER	ｶﾊﾞｰ	1	A,B,C,E,F
3	Z-8-94227-479-0		SCREW	ｽｸﾘｭ	2	A,B,C,E,F
4	Z-8-94227-480-0		SHAFT,DRIVE	ｼｬﾌﾄ	1	A,B,C,E,F
5	Z-8-94277-481-0		KEY	ｷｰ	1	A,B,C,E,F
6	Z-8-94169-528-0		DAMPER	ﾀﾞﾝﾊﾟ	2	A,B,C,E,F
7	Z-8-94227-483-0		GEAR	ｷﾞﾔｰ	1	A,B,C,E,F
8	Z-8-94227-484-0		WASHER	ﾜｯｼｬ	1	A,B,C,E,F
9	Z-8-94433-760-0		ROLLER	ﾛｰﾗ	1	A,B,C,E,F
10	Z-8-94227-486-0		PIN	ﾋﾟﾝ	1	A,B,C,E,F
11	Z-8-94227-487-0		PIN	ﾋﾟﾝ	1	A,B,C,E,F
12	Z-8-94227-488-0		CLIP	ｸﾘｯﾌﾟ	1	A,B,C,E,F
13	Z-8-94227-489-0		DISC	ﾃﾞｨｽｸ	1	A,B,C,E,F
14	Z-8-94429-157-0		DISC,CAM	ﾃﾞｨｽｸ	1	A,B,C,E,F
K	Z-8-94228-545-0		REPIAR KIT	ﾘﾍﾟｱｷｯﾄ	1	A,B,C,E,F INC.15,21,33,35,44,46 & etc.
15	Z-8-94227-491-0	*	O RING	Oﾘﾝｸﾞ	1	A,B,C,E,F
16	Z-8-94321-171-0		PISTON	ﾋﾟｽﾄﾝ	1	A,B,C,E,F
17	Z-8-94227-493-0		SLIDER	ｽﾗｲﾀﾞ	1	A,B,C,E,F
18	Z-8-94227-495-0		SHIM	ｼﾑ	AR	A,B,C,E,F t=0.6mm
19	Z-8-94316-669-0		SPRING	ｽﾌﾟﾘﾝｸﾞ	1	A,B,C,E,F 2.25kg/mm²
-	Z-8-94343-340-0		SPRING	ｽﾌﾟﾘﾝｸﾞ	1	A,B,C,E,F L=38.5
-	Z-9-81345-072-0		SPRING	ｽﾌﾟﾘﾝｸﾞ	1	A,B,C,E,F L=38.5
20	Z-8-94227-495-0		SHIM	ｼﾑ	AR	A,B,C,E,F t=0.6mm
-	Z-8-94227-496-0		SHIM	ｼﾑ	AR	A,B,C,E,F t=0.7mm
-	Z-8-94227-497-0		SHIM	ｼﾑ	AR	A,B,C,E,F t=0.9mm
-	Z-8-94227-498-0		SHIM	ｼﾑ	AR	A,B,C,E,F t=1.0mm
-	Z-8-94227-499-0		SHIM	ｼﾑ	AR	A,B,C,E,F t=1.2mm
-	Z-8-94121-620-0		SHIM	ｼﾑ	AR	A,B,C,E,F t=2.4mm
21	Z-8-94227-491-0	*	O RING	Oﾘﾝｸﾞ	1	A,B,C,E,F
22	Z-8-94473-120-0		COVER	ｶﾊﾞｰ	1	A,B,C,E,F
23	Z-8-94313-276-0		SCREW	ｽｸﾘｭ	2	A,B,C,E,F

FIG. 19 INJECTION PUMP (1/2)(A,B,C,E,F)
ｲﾝｼﾞｪｸｼｮﾝﾎﾟﾝﾌﾟ

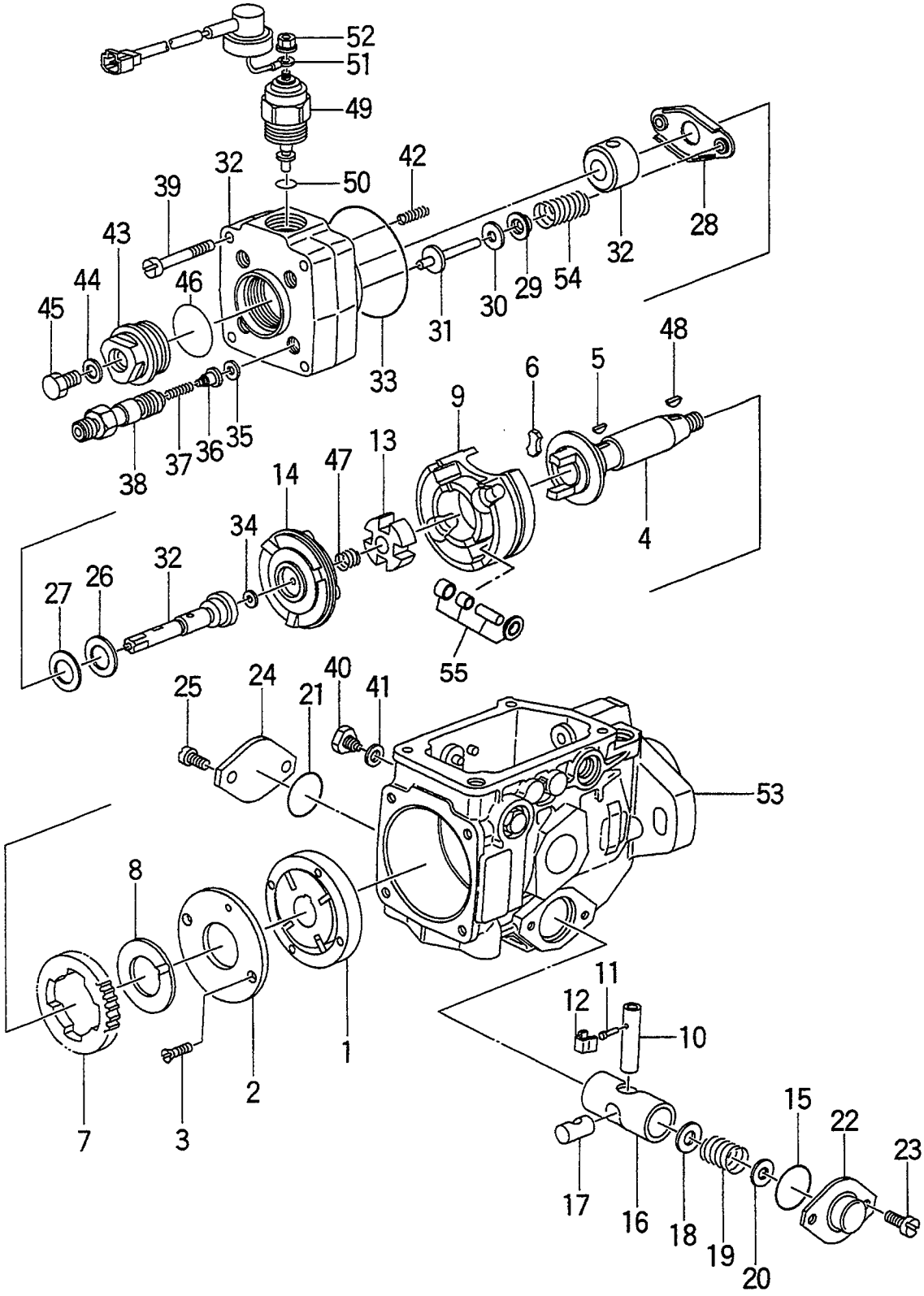

A: C240PKJ D: C240PKJ-12
B: C240PKJ-06 E: C240PKJ-17
C: C240PKJ-11 F: C240PKJ-20

FIG. 19

Item No. 見出番号	Part No. 部品番号	Mark 記号	Description 部品名称		Req'd 個数	Remarks : serial No. 備考：実施号車
24	Z-8-94242-967-0		COVER	ｶﾊﾞｰ	1	A,B,C,E,F
25	Z-8-94313-276-0		SCREW	ｽｸﾘｭ	2	A,B,C,E,F
26	Z-8-94227-514-0		SHIM	ｼﾑ	1	A,B,C,E,F
27	Z-8-94227-515-0		WASHER	ﾜｯｼｬ	1	A,B,C,E,F
28	Z-8-94227-516-1		SEAT	ｼｰﾄ	1	A,B,C,E,F
29	Z-8-94227-517-0		SEAT,SPRING	ｼｰﾄ	2	A,B,C,E,F
30	Z-8-94227-518-0		SHIM	ｼﾑ	AR	A,B,C,E,F t=0.5mm
-	Z-8-94227-519-0		SHIM	ｼﾑ	AR	A,B,C,E,F t=0.8mm
-	Z-8-94227-520-0		SHIM	ｼﾑ	AR	A,B,C,E,F t=1.0mm
-	Z-8-94227-521-0		SHIM	ｼﾑ	AR	A,B,C,E,F t=1.2mm
-	Z-8-94227-522-0		SHIM	ｼﾑ	AR	A,B,C,E,F t=1.5mm
-	Z-8-94227-523-0		SHIM	ｼﾑ	AR	A,B,C,E,F t=1.8mm
-	Z-8-94227-524-0		SHIM	ｼﾑ	AR	A,B,C,E,F t=2.0mm
-	Z-8-94433-204-0		SHIM	ｼﾑ	AR	A,B,C,E,F t=0.9mm
-	Z-8-94433-205-0		SHIM	ｼﾑ	AR	A,B,C,E,F t=1.1mm
-	Z-8-94433-206-0		SHIM	ｼﾑ	AR	A,B,C,E,F t=1.3mm
-	Z-8-94433-207-0		SHIM	ｼﾑ	AR	A,B,C,E,F t=1.4mm
-	Z-8-94433-208-0		SHIM	ｼﾑ	AR	A,B,C,E,F t=1.6mm
-	Z-8-94433-209-0		SHIM	ｼﾑ	AR	A,B,C,E,F t=1.7mm
-	Z-8-97146-139-0		SHIM	ｼﾑ	AR	A,B,C,E,F t=0.4mm
-	Z-8-97146-140-0		SHIM	ｼﾑ	AR	A,B,C,E,F t=0.6mm
-	Z-8-97146-141-0		SHIM	ｼﾑ	AR	A,B,C,E,F t=0.7mm
-	Z-8-97146-142-0		SHIM	ｼﾑ	AR	A,B,C,E,F t=1.9mm
31	Z-8-94227-525-0		PIN,GUIDE	ﾋﾟﾝ	2	A,B,C,F
-	Z-8-94227-525-0		PIN,GUIDE	ﾋﾟﾝ	2	E -1999.5
-	Z-8-97214-365-0		PIN,GUIDE	ﾋﾟﾝ	2	E 1999.6-
32	Z-8-94328-604-0		HEAD	ﾍｯﾄﾞ	1	A,B,C,E,F
33	Z-8-94227-527-0	*	O RING	Oﾘﾝｸﾞ	1	A,B,C,E,F
34	Z-8-94227-528-0		SHIM	ｼﾑ	AR	A,B,C,E,F t=1.9mm

FIG. 19 INJECTION PUMP (1/2)(A,B,C,E,F)
ｲﾝｼﾞｪｸｼｮﾝﾎﾟﾝﾌﾟ

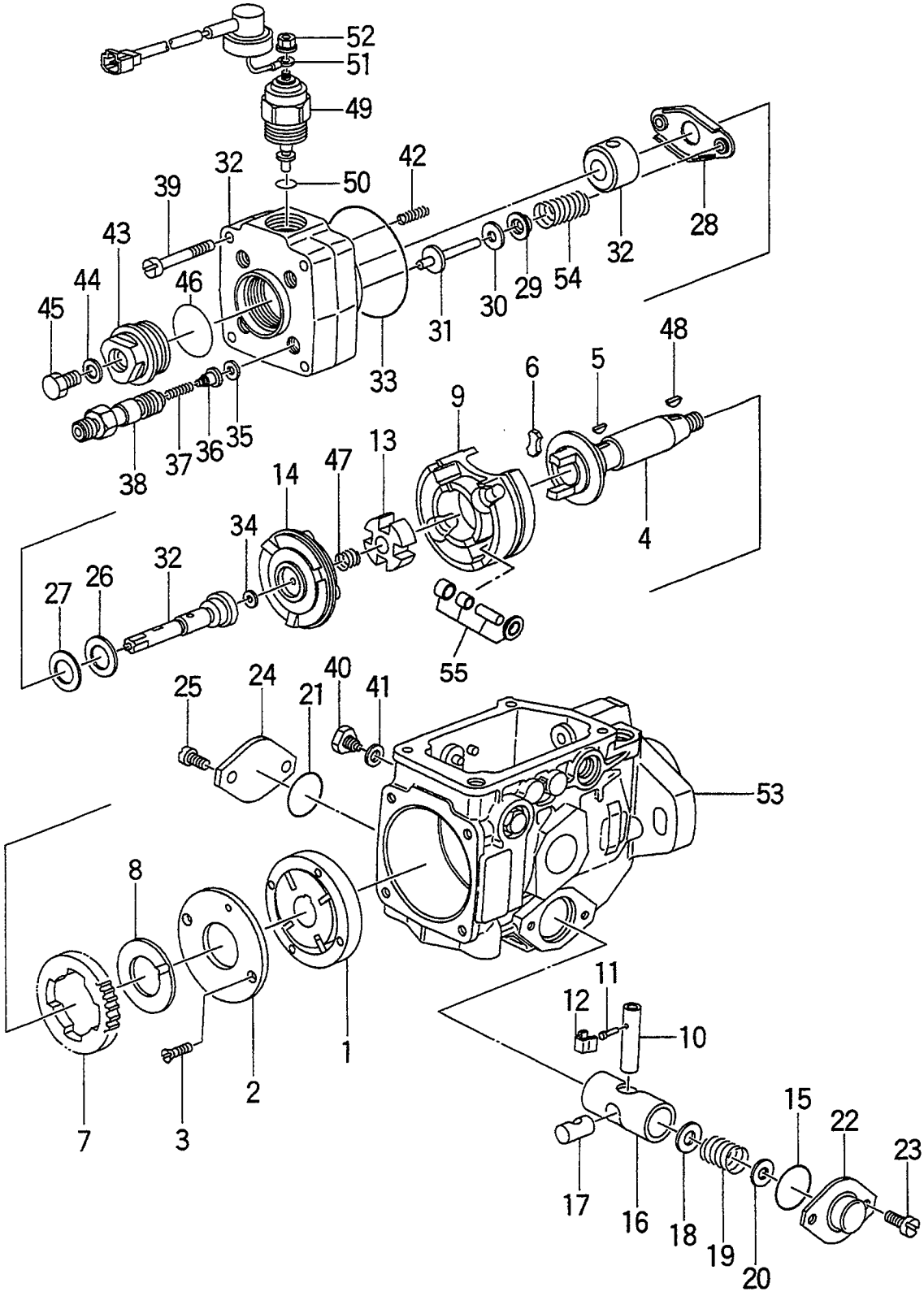

FIG. 19

A: C240PKJ D: C240PKJ-12
B: C240PKJ-06 E: C240PKJ-17
C: C240PKJ-11 F: C240PKJ-20

Item No. 見出番号	Part No. 部品番号	Mark 記号	Description 部品名称	Req'd 個数	Remarks : serial No. 備考：実施号車
34	Z-8-94227-529-0		SHIM シム	AR	A,B,C,E,F t=1.92mm
-	Z-8-94227-530-0		SHIM シム	AR	A,B,C,E,F t=1.94mm
-	Z-8-94227-531-0		SHIM シム	AR	A,B,C,E,F t=1.96mm
-	Z-8-94227-532-0		SHIM シム	AR	A,B,C,E,F t=1.98mm
-	Z-8-94227-533-0		SHIM シム	AR	A,B,C,E,F t=2.0mm
-	Z-8-94227-534-0		SHIM シム	AR	A,B,C,E,F t=2.02mm
-	Z-8-94227-535-0		SHIM シム	AR	A,B,C,E,F t=2.04mm
-	Z-8-94227-536-0		SHIM シム	AR	A,B,C,E,F t=2.06mm
-	Z-8-94227-537-0		SHIM シム	AR	A,B,C,E,F t=2.08mm
-	Z-8-94227-538-0		SHIM シム	AR	A,B,C,E,F t=2.1mm
-	Z-8-94227-539-0		SHIM シム	AR	A,B,C,E,F t=2.12mm
-	Z-8-94227-540-0		SHIM シム	AR	A,B,C,E,F t=2.14mm
-	Z-8-94227-541-0		SHIM シム	AR	A,B,C,E,F t=2.16mm
-	Z-8-94227-542-0		SHIM シム	AR	A,B,C,E,F t=2.18mm
-	Z-8-94227-543-0		SHIM シム	AR	A,B,C,E,F t=2.2mm
-	Z-8-94227-544-0		SHIM シム	AR	A,B,C,E,F t=2.22mm
-	Z-8-94227-545-0		SHIM シム	AR	A,B,C,E,F t=2.24mm
-	Z-8-94227-546-0		SHIM シム	AR	A,B,C,E,F t=2.26mm
-	Z-8-94227-547-0		SHIM シム	AR	A,B,C,E,F t=2.28mm
-	Z-8-94227-548-0		SHIM シム	AR	A,B,C,E,F t=2.3mm
-	Z-8-94227-549-0		SHIM シム	AR	A,B,C,E,F t=2.32mm
-	Z-8-94227-550-0		SHIM シム	AR	A,B,C,E,F t=2.34mm
-	Z-8-94227-551-0		SHIM シム	AR	A,B,C,E,F t=2.36mm
-	Z-8-94227-552-0		SHIM シム	AR	A,B,C,E,F t=2.38mm
-	Z-8-94227-553-0		SHIM シム	AR	A,B,C,E,F t=2.4mm

FIG. 19 INJECTION PUMP (1/2)(A,B,C,E,F)
ｲﾝｼﾞｪｸｼｮﾝﾎﾟﾝﾌﾟ

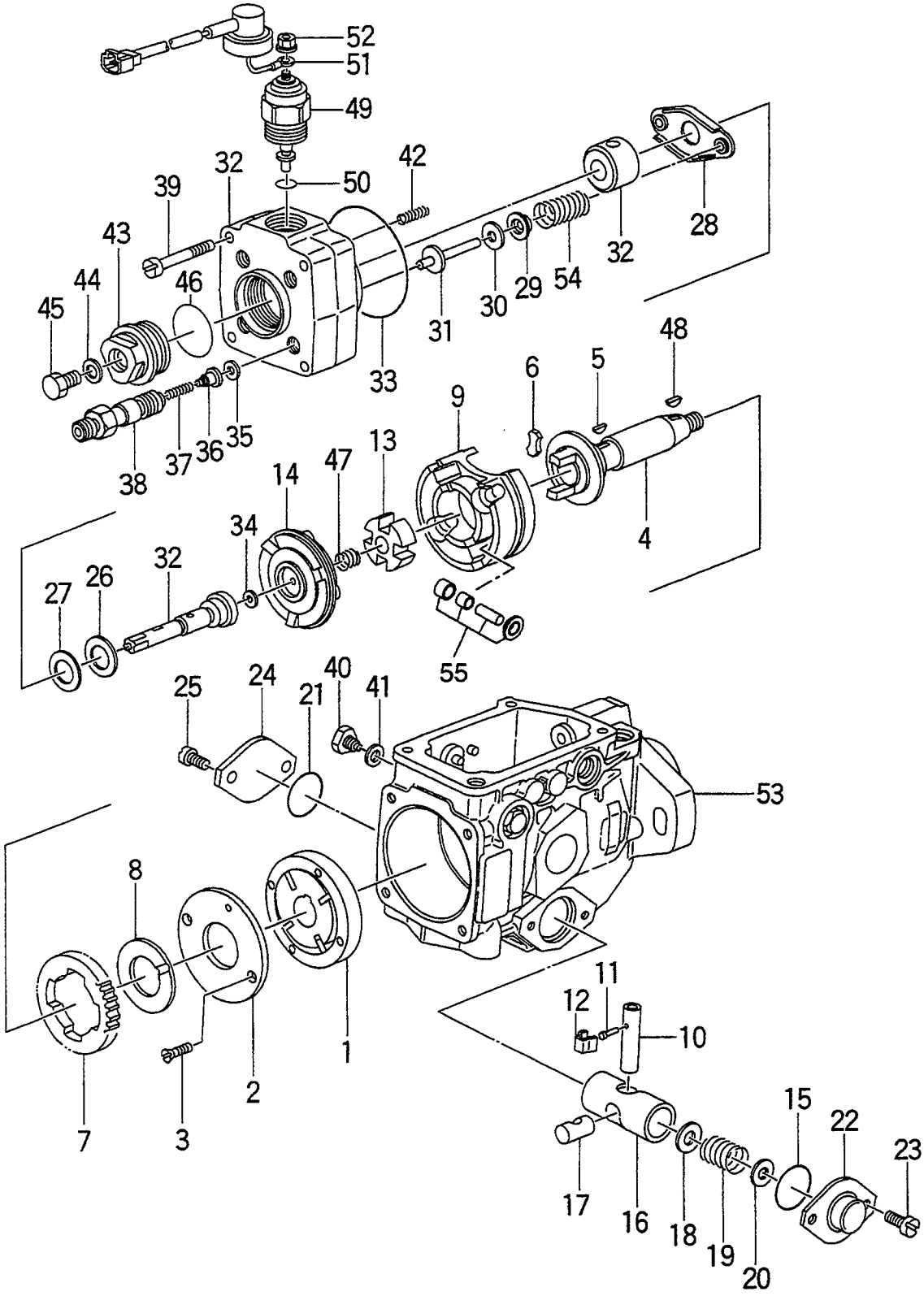

A: C240PKJ D: C240PKJ-12
B: C240PKJ-06 E: C240PKJ-17
C: C240PKJ-11 F: C240PKJ-20

FIG. 19

Item No. 見出番号	Part No. 部品番号	Mark 記号	Description 部品名称	Req'd 個数	Remarks : serial No. 備考：実施号車
34	Z-8-94227-554-0		SHIM シム	AR	A,B,C,E,F t=2.42mm
-	Z-8-94227-555-0		SHIM シム	AR	A,B,C,E,F t=2.44mm
-	Z-8-94227-556-0		SHIM シム	AR	A,B,C,E,F t=2.46mm
-	Z-8-94227-557-0		SHIM シム	AR	A,B,C,E,F t=2.48mm
-	Z-8-94227-558-0		SHIM シム	AR	A,B,C,E,F t=2.5mm
-	Z-8-94227-559-0		SHIM シム	AR	A,B,C,E,F t=2.52mm
-	Z-8-94227-560-0		SHIM シム	AR	A,B,C,E,F t=2.54mm
-	Z-8-94227-561-0		SHIM シム	AR	A,B,C,E,F t=2.56mm
-	Z-8-94227-562-0		SHIM シム	AR	A,B,C,E,F t=2.58mm
-	Z-8-94227-563-0		SHIM シム	AR	A,B,C,E,F t=2.6mm
-	Z-8-94227-564-0		SHIM シム	AR	A,B,C,E,F t=2.62mm
-	Z-8-94227-565-0		SHIM シム	AR	A,B,C,E,F t=2.64mm
-	Z-8-94227-566-0		SHIM シム	AR	A,B,C,E,F t=2.66mm
-	Z-8-94227-567-0		SHIM シム	AR	A,B,C,E,F t=2.68mm
-	Z-8-94227-568-0		SHIM シム	AR	A,B,C,E,F t=2.7mm
-	Z-8-94227-569-0		SHIM シム	AR	A,B,C,E,F t=2.72mm
-	Z-8-94227-570-0		SHIM シム	AR	A,B,C,E,F t=2.74mm
-	Z-8-94227-571-0		SHIM シム	AR	A,B,C,E,F t=2.76mm
-	Z-8-94227-572-0		SHIM シム	AR	A,B,C,E,F t=2.78mm
-	Z-8-94227-573-0		SHIM シム	AR	A,B,C,E,F t=2.8mm
-	Z-8-94227-574-0		SHIM シム	AR	A,B,C,E,F t=2.82mm
-	Z-8-94227-575-0		SHIM シム	AR	A,B,C,E,F t=2.84mm
-	Z-8-94227-576-0		SHIM シム	AR	A,B,C,E,F t=2.86mm
-	Z-8-94227-577-0		SHIM シム	AR	A,B,C,E,F t=2.88mm
-	Z-8-94227-578-0		SHIM シム	AR	A,B,C,E,F t=2.9mm

FIG. 19 INJECTION PUMP (1/2)(A,B,C,E,F)
ｲﾝｼﾞｪｸｼｮﾝﾎﾟﾝﾌﾟ

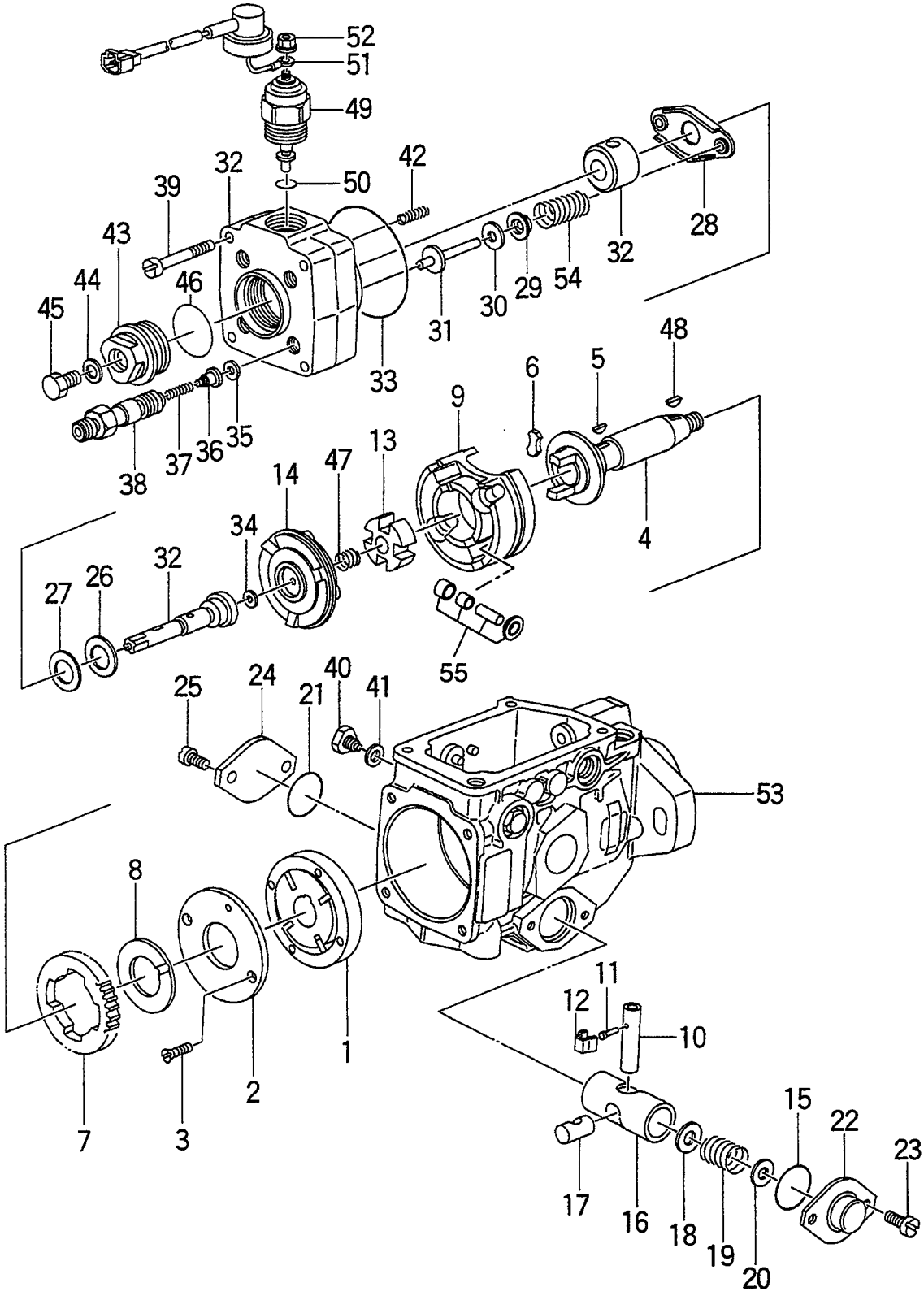

FIG. 19

A: C240PKJ D: C240PKJ-12
B: C240PKJ-06 E: C240PKJ-17
C: C240PKJ-11 F: C240PKJ-20

Item No. 見出番号	Part No. 部品番号	Mark 記号	Description 部品名称		Req'd 個数	Remarks : serial No. 備考：実施号車
34	Z-8-94111-658-0		SHIM	ｼﾑ	AR	A,B,C,E,F t=1.74mm
-	Z-8-94111-659-0		SHIM	ｼﾑ	AR	A,B,C,E,F t=1.76mm
-	Z-8-94111-660-0		SHIM	ｼﾑ	AR	A,B,C,E,F t=1.78mm
-	Z-8-94111-661-0		SHIM	ｼﾑ	AR	A,B,C,E,F t=1.8mm
-	Z-8-94111-662-0		SHIM	ｼﾑ	AR	A,B,C,E,F t=1.82mm
-	Z-8-94111-663-0		SHIM	ｼﾑ	AR	A,B,C,E,F t=1.84mm
-	Z-8-94111-664-0		SHIM	ｼﾑ	AR	A,B,C,E,F t=1.86mm
-	Z-8-94111-665-0		SHIM	ｼﾑ	AR	A,B,C,E,F t=1.88mm
35	Z-8-94247-716-0	*	GASKET	ｶﾞｽｹｯﾄ	4	A,B,C,E,F
36	Z-8-94460-298-0		VALVE,DELIVERY	ﾊﾞﾙﾌﾞ	4	A,B,C,E,F
37	Z-8-94227-581-0		SPRING	ｽﾌﾟﾘﾝｸﾞ	4	A,B,C,E,F
38	Z-8-94227-582-0		HOLDER	ﾎﾙﾀﾞ	4	A,B,C,E,F
39	Z-8-94257-670-0		SCREW	ｽｸﾘｭ	4	A,B,C,E,F
40	Z-8-94227-601-0		BOLT	ﾎﾞﾙﾄ	2	A,B,C,E,F
41	Z-8-94227-602-0		GASKET	ｶﾞｽｹｯﾄ	2	A,B,C,E,F
42	Z-8-94473-128-0		SPRING	ｽﾌﾟﾘﾝｸﾞ	2	A,B,C,E,F
43	Z-8-94227-638-0		PLUG	ﾌﾟﾗｸﾞ	1	A,B,C,E,F INC.44-46
44	Z-8-94227-602-0	*	GASKET	ｶﾞｽｹｯﾄ	1	A,B,C,E,F
45	Z-8-94227-639-0		BOLT	ﾎﾞﾙﾄ	1	A,B,C,E,F
46	Z-8-94227-637-0	*	O RING	Oﾘﾝｸﾞ	1	A,B,C,E,F
47	Z-8-94227-647-0		SPRING	ｽﾌﾟﾘﾝｸﾞ	1	A,B,C,E,F
48	Z-5-83539-024-0		KEY	ｷｰ	1	A,B,C,E,F
49	Z-8-94242-275-0		VALVE,MAGNET	ﾊﾞﾙﾌﾞ	1	A,B,C,E,F 12V STD
-	Z-8-94433-811-0		VALVE,MAGNET	ﾊﾞﾙﾌﾞ	1	A,B,C,E,F 24V OP
50	Z-8-94239-373-0		O RING	Oﾘﾝｸﾞ	1	A,B,C,E,F
51	Z-8-94470-582-0		WIRE	ﾜｲﾔ	1	A,B,C,E,F
52	Z-8-94473-135-0		NUT	ﾅｯﾄ	1	A,B,C,E,F
53	Z-8-94328-610-0		HOUSING	ﾊｳｼﾞﾝｸﾞ	1	A,B,C,F
-	Z-8-94328-610-0		HOUSING	ﾊｳｼﾞﾝｸﾞ	1	E -1999.5
-	Z-8-97233-092-0		HOUSING	ﾊｳｼﾞﾝｸﾞ	1	E 1999.6-
54	Z-8-94229-164-0		SPRING	ｽﾌﾟﾘﾝｸﾞ	1	A,B,C,E,F
55	Z-8-97163-172-0		ROLLER	ﾛｰﾗ	1	E 1999.6-

FIG. 20 INJECTION PUMP (2/2)(A,B,C,E,F)
インジェクションポンプ

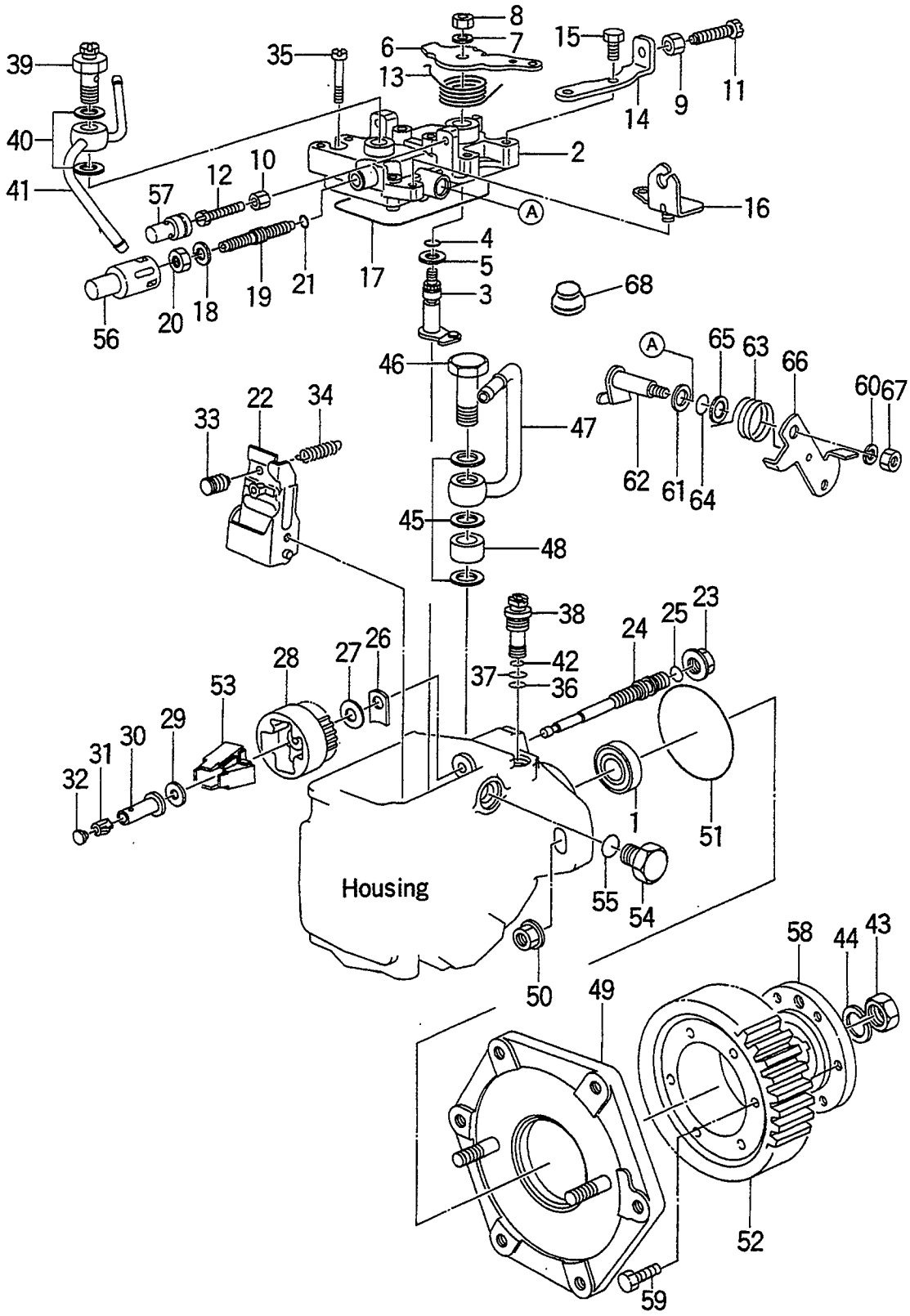

FIG. 20

A: C240PKJ D: C240PKJ-12
B: C240PKJ-06 E: C240PKJ-17
C: C240PKJ-11 F: C240PKJ-20

Item No. 見出番号	Part No. 部品番号	Mark 記号	Description 部品名称		Req'd 個数	Remarks : serial No. 備考：実施号車
1	Z-8-97147-034-0		SEAL,OIL	ｼｰﾙ	1	A,B,C,E,F
2	Z-8-94336-944-0		COVER	ｶﾊﾞｰ	1	A,B,C,E,F
3	Z-8-94174-828-0		SHAFT	ｼｬﾌﾄ	1	A,B,C,E,F
4	Z-8-94227-585-0		O RING	Oﾘﾝｸﾞ	1	A,B,C,E,F
5	Z-8-94227-590-0		WASHER	ﾜｯｼｬ	1	A,B,C,E,F
6	Z-8-94460-301-0		LEVER	ﾚﾊﾞｰ	1	A,B,C,E,F
-	Z-8-94460-302-0		LEVER	ﾚﾊﾞｰ	1	A,B,C,E,F
7	02010-00006		WASHER	ﾜｯｼｬ	1	A,B,C,E,F
8	Z-1-15729-006-0		NUT	ﾅｯﾄ	1	A,B,C,E,F
9	Z-1-15729-006-0		NUT	ﾅｯﾄ	1	A,B,C,E,F
10	Z-8-94426-047-1		NUT	ﾅｯﾄ	1	A,B,C,E,F
11	Z-8-94426-049-0		BOLT	ﾎﾞﾙﾄ	2	A,B,C,E,F
12	Z-8-94426-049-0		BOLT	ﾎﾞﾙﾄ	1	A,B,C,E,F
13	Z-8-94132-785-0		SPRING	ｽﾌﾟﾘﾝｸﾞ	1	A,B,C,E,F
14	Z-8-94371-052-0		BRACKET	ﾌﾞﾗｹｯﾄ	1	A,B,C,F
-	Z-8-94371-052-0		BRACKET	ﾌﾞﾗｹｯﾄ	1	E -1999.5
-	Z-8-97233-091-0		BRACKET	ﾌﾞﾗｹｯﾄ	1	E 1999.6-
15	Z-8-94331-551-0		BOLT	ﾎﾞﾙﾄ	2	A,B,C,E,F
16	Z-8-94328-607-0		BRACKET	ﾌﾞﾗｹｯﾄ	1	A,B,C,E,F
K	Z-8-94228-545-0		REPAIR KIT	ﾘﾍﾟｱｷｯﾄ	1	A,B,C,E,F INC.17,21,25,36,37 & etc.
17	Z-8-97136-413-0	*	RING	ﾘﾝｸﾞ	1	A,B,C,E,F
18	Z-8-94227-593-0		WASHER	ﾜｯｼｬ	1	A,B,C,E,F
19	Z-8-94316-274-0		SCREW	ｽｸﾘｭ	1	A,B,C,F L=53.00
-	Z-8-94316-274-0		SCREW	ｽｸﾘｭ	1	E L=53.00 -1999.5
-	Z-8-97214-479-0		SCREW	ｽｸﾘｭ	1	E L=53.00 1999.6-
-	Z-8-94316-275-0		SCREW	ｽｸﾘｭ	1	A,B,C,F L=55.00
-	Z-8-94316-275-0		SCREW	ｽｸﾘｭ	1	E L=55.00 -1999.5
-	Z-8-97214-480-0		SCREW	ｽｸﾘｭ	1	E L=55.00 1999.6-
-	Z-8-94316-276-0		SCREW	ｽｸﾘｭ	1	A,B,C,F L=57.00
-	Z-8-94316-276-0		SCREW	ｽｸﾘｭ	1	E L=57.00 -1999.5
-	Z-8-97214-481-0		SCREW	ｽｸﾘｭ	1	E L=57.00 1999.6-
20	Z-8-94316-277-0		NUT	ﾅｯﾄ	1	A,B,C,F

FIG. 20 INJECTION PUMP (2/2)(A,B,C,E,F)
インジェクションポンプ

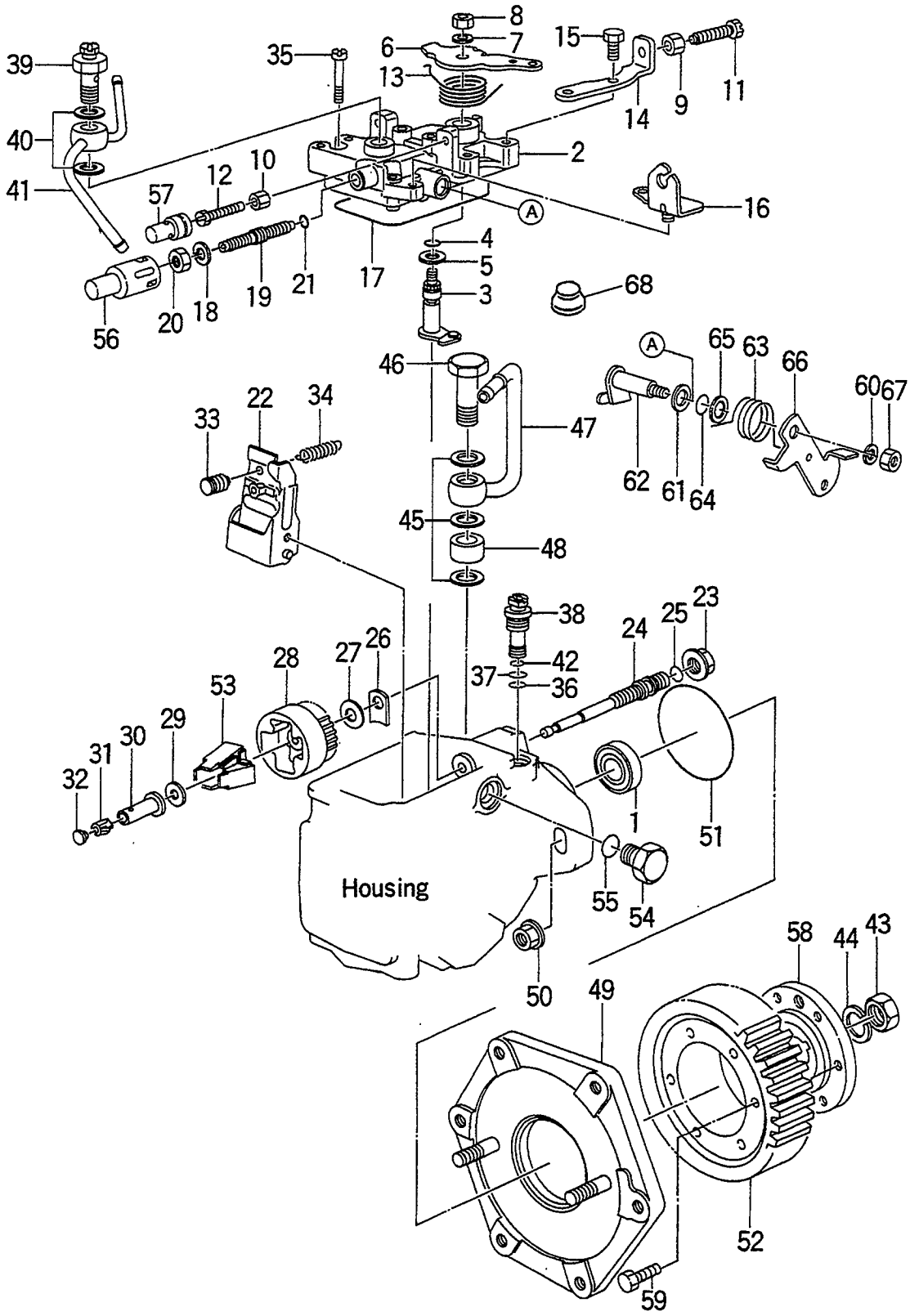

FIG. 20

A: C240PKJ D: C240PKJ-12
B: C240PKJ-06 E: C240PKJ-17
C: C240PKJ-11 F: C240PKJ-20

Item No. 見出番号	Part No. 部品番号	Mark 記号	Description 部品名称		Req'd 個数	Remarks : serial No. 備考：実施号車
20	Z-8-94316-277-0		NUT	ﾅｯﾄ	1	E -1999.5
-	Z-8-97214-482-0		NUT	ﾅｯﾄ	1	E 1999.6-
21	Z-8-94227-598-0	*	O RING	Oﾘﾝｸﾞ	1	A,B,C,E,F
22	Z-8-97062-238-0		LEVER	ﾚﾊﾞｰ	1	A,B,C,E,F
23	Z-8-94473-129-0		NUT	ﾅｯﾄ	1	A,B,C,E,F
24	Z-8-94248-002-0		SHAFT	ｼｬﾌﾄ	1	A,B,C,E,F
25	Z-8-94227-606-0	*	O RING	Oﾘﾝｸﾞ	1	A,B,C,E,F
26	Z-8-94227-607-0		SHIM	ｼﾑ	AR	A,B,C,E,F t=1.05mm
-	Z-8-94227-608-0		SHIM	ｼﾑ	AR	A,B,C,E,F t=1.25mm
-	Z-8-94227-609-0		SHIM	ｼﾑ	AR	A,B,C,E,F t=1.45mm
-	Z-8-94227-610-0		SHIM	ｼﾑ	AR	A,B,C,E,F t=1.65mm
-	Z-8-94227-611-0		SHIM	ｼﾑ	AR	A,B,C,E,F t=1.85mm
-	Z-8-94231-123-0		SHIM	ｼﾑ	AR	A,B,C,E,F t=1.15mm
-	Z-8-94231-124-0		SHIM	ｼﾑ	AR	A,B,C,E,F t=1.35mm
-	Z-8-94231-125-0		SHIM	ｼﾑ	AR	A,B,C,E,F t=1.55mm
-	Z-8-94231-126-0		SHIM	ｼﾑ	AR	A,B,C,E,F t=1.75mm
27	Z-8-94227-612-0		WASHER	ﾜｯｼｬ	1	A,B,C,E,F
28	Z-8-94227-613-0		HOLDER	ﾎﾙﾀﾞ	1	A,B,C,E,F
29	Z-8-94408-517-0		WASHER	ﾜｯｼｬ	1	A,B,C,E,F
30	Z-8-97144-355-0		SLEEVE	ｽﾘｰﾌﾞ	1	A,B,C,E,F
31	Z-8-97144-356-0		CAP	ｷｬｯﾌﾟ	1	A,B,C,E,F
32	Z-8-97144-357-0		PLUG	ﾌﾟﾗｸﾞ	AR	A,B,C,E,F L=5.00
-	Z-8-97144-358-0		PLUG	ﾌﾟﾗｸﾞ	AR	A,B,C,E,F L=5.10
-	Z-8-97144-359-0		PLUG	ﾌﾟﾗｸﾞ	AR	A,B,C,E,F L=5.20
-	Z-8-97144-360-0		PLUG	ﾌﾟﾗｸﾞ	AR	A,B,C,E,F L=5.30
-	Z-8-97144-361-0		PLUG	ﾌﾟﾗｸﾞ	AR	A,B,C,E,F L=5.40
-	Z-8-97144-362-0		PLUG	ﾌﾟﾗｸﾞ	AR	A,B,C,E,F L=5.50
-	Z-8-97144-363-0		PLUG	ﾌﾟﾗｸﾞ	AR	A,B,C,E,F L=5.60
-	Z-8-97144-364-0		PLUG	ﾌﾟﾗｸﾞ	AR	A,B,C,E,F L=5.70
-	Z-8-97144-365-0		PLUG	ﾌﾟﾗｸﾞ	AR	A,B,C,E,F L=5.80

FIG. 20 INJECTION PUMP (2/2)(A,B,C,E,F)
インジェクションポンプ

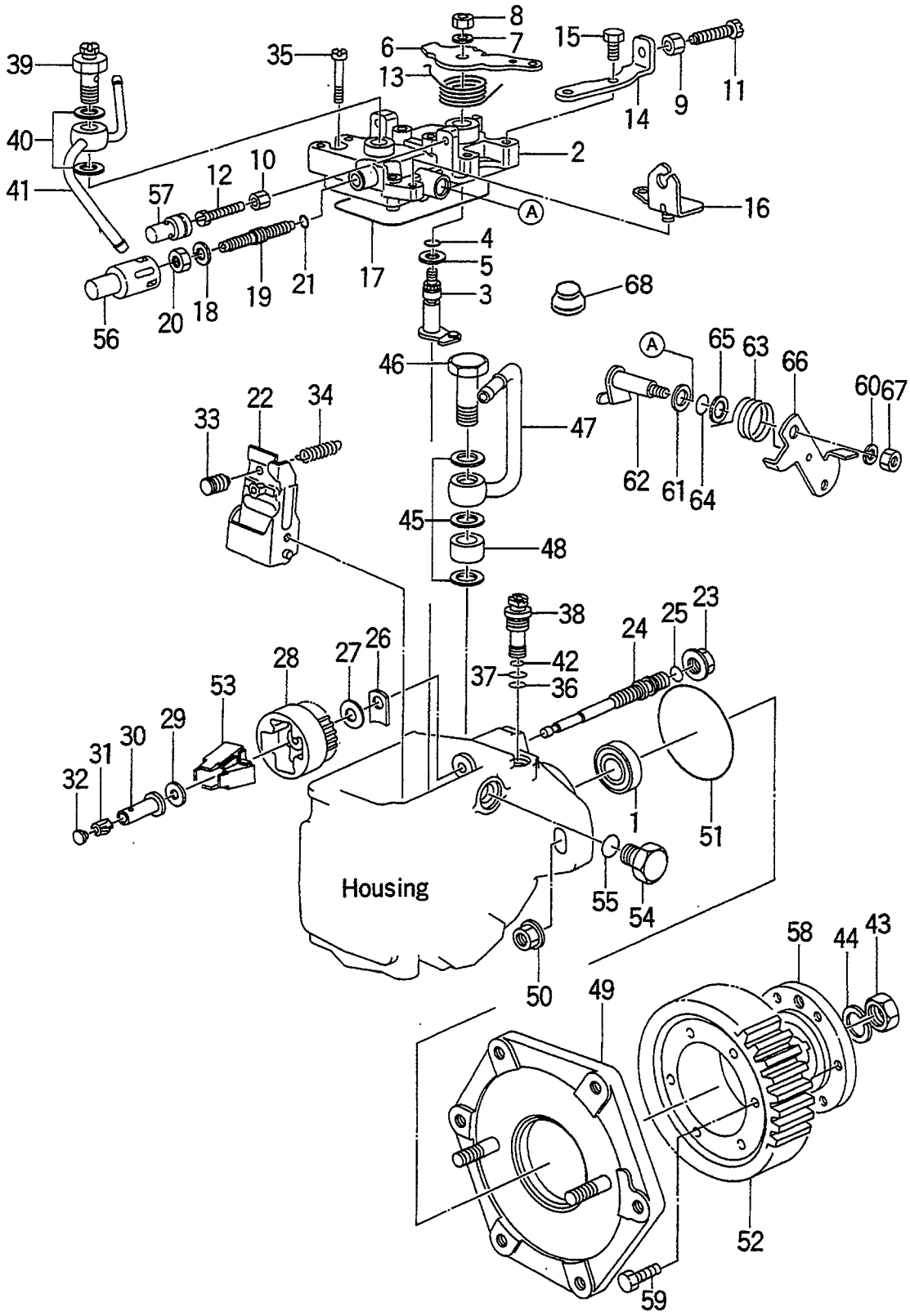

FIG. 20

A: C240PKJ D: C240PKJ-12
B: C240PKJ-06 E: C240PKJ-17
C: C240PKJ-11 F: C240PKJ-20

Item No. 見出番号	Part No. 部品番号	Mark 記号	Description 部品名称	Req'd 個数	Remarks : serial No. 備考：実施号車
32	Z-8-97144-366-0		PLUG ﾌﾟﾗｸﾞ	AR	A,B,C,E,F L=5.90
-	Z-8-97144-367-0		PLUG ﾌﾟﾗｸﾞ	AR	A,B,C,E,F L=6.00
-	Z-8-97144-368-0		PLUG ﾌﾟﾗｸﾞ	AR	A,B,C,E,F L=6.10
-	Z-8-97144-369-0		PLUG ﾌﾟﾗｸﾞ	AR	A,B,C,E,F L=6.20
-	Z-8-97144-370-0		PLUG ﾌﾟﾗｸﾞ	AR	A,B,C,E,F L=6.30
-	Z-8-97144-371-0		PLUG ﾌﾟﾗｸﾞ	AR	A,B,C,E,F L=6.40
-	Z-8-97144-372-0		PLUG ﾌﾟﾗｸﾞ	AR	A,B,C,E,F L=6.50
-	Z-8-97144-373-0		PLUG ﾌﾟﾗｸﾞ	AR	A,B,C,E,F L=6.60
-	Z-8-97144-374-0		PLUG ﾌﾟﾗｸﾞ	AR	A,B,C,E,F L=6.70
-	Z-8-97144-375-0		PLUG ﾌﾟﾗｸﾞ	AR	A,B,C,E,F L=6.80
-	Z-8-97144-376-0		PLUG ﾌﾟﾗｸﾞ	AR	A,B,C,E,F L=6.90
-	Z-8-97144-377-0		PLUG ﾌﾟﾗｸﾞ	AR	A,B,C,E,F L=7.00
-	Z-8-97144-378-0		PLUG ﾌﾟﾗｸﾞ	AR	A,B,C,E,F L=7.10
-	Z-8-97144-379-0		PLUG ﾌﾟﾗｸﾞ	AR	A,B,C,E,F L=7.20
-	Z-8-97144-380-0		PLUG ﾌﾟﾗｸﾞ	AR	A,B,C,E,F L=7.30
-	Z-8-97144-381-0		PLUG ﾌﾟﾗｸﾞ	AR	A,B,C,E,F L=7.40
-	Z-8-97144-382-0		PLUG ﾌﾟﾗｸﾞ	AR	A,B,C,E,F L=7.50
-	Z-8-97144-383-0		PLUG ﾌﾟﾗｸﾞ	AR	A,B,C,E,F L=7.60
-	Z-8-97144-384-0		PLUG ﾌﾟﾗｸﾞ	AR	A,B,C,E,F L=7.70
-	Z-8-97144-385-0		PLUG ﾌﾟﾗｸﾞ	AR	A,B,C,E,F L=7.80
-	Z-8-97144-386-0		PLUG ﾌﾟﾗｸﾞ	AR	A,B,C,E,F L=7.90
-	Z-8-97144-387-0		PLUG ﾌﾟﾗｸﾞ	AR	A,B,C,E,F L=8.00
-	Z-8-97144-388-0		PLUG ﾌﾟﾗｸﾞ	AR	A,B,C,E,F L=8.10
-	Z-8-97144-389-0		PLUG ﾌﾟﾗｸﾞ	AR	A,B,C,E,F L=8.20
-	Z-8-97144-390-0		PLUG ﾌﾟﾗｸﾞ	AR	A,B,C,E,F L=8.30

FIG. 20 INJECTION PUMP (2/2)(A,B,C,E,F)
インジェクションポンプ

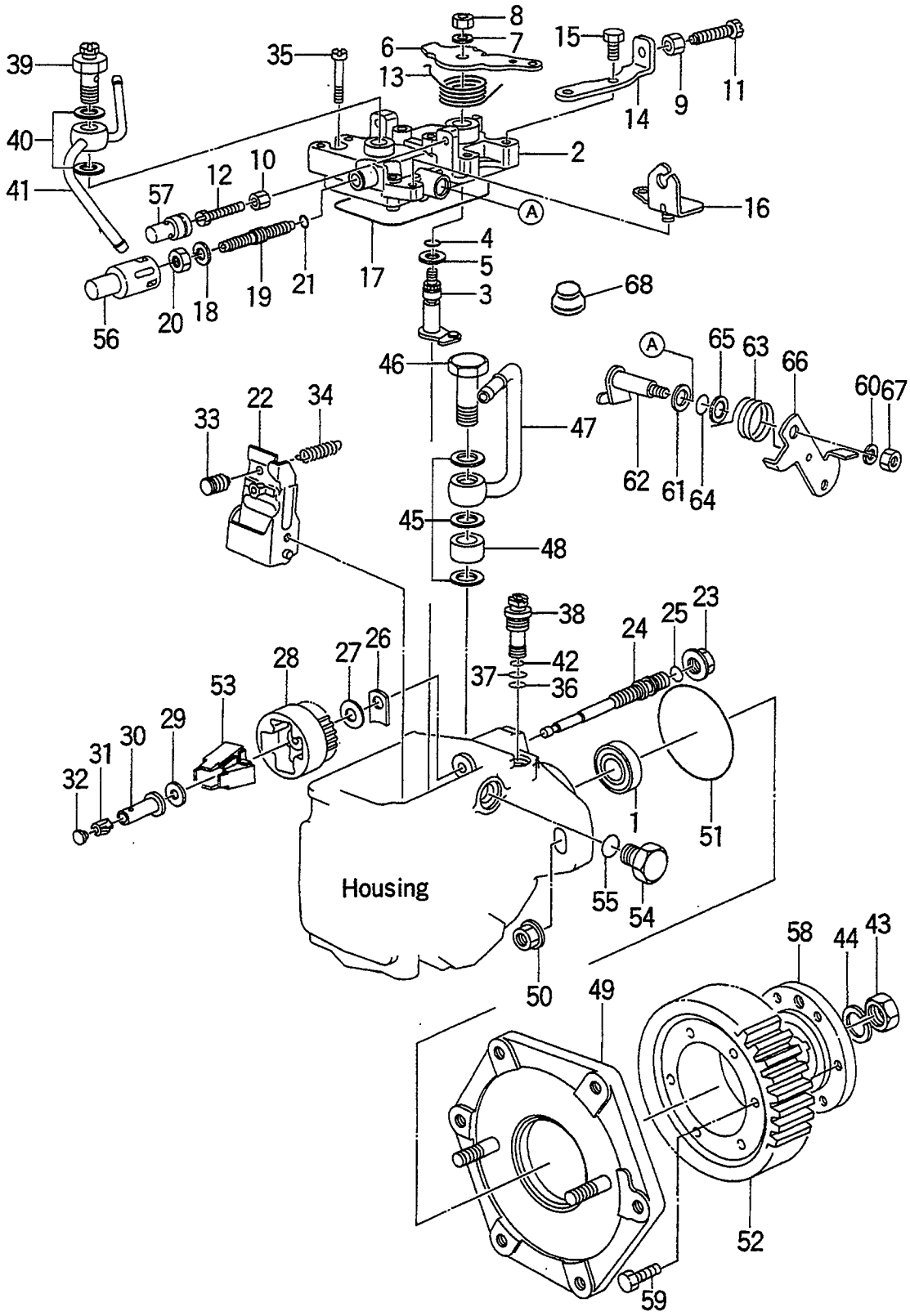

A: C240PKJ D: C240PKJ-12
B: C240PKJ-06 E: C240PKJ-17
C: C240PKJ-11 F: C240PKJ-20

FIG. 20

Item No. 見出番号	Part No. 部品番号	Mark 記号	Description 部品名称		Req'd 個数	Remarks : serial No. 備考：実施号車
32	Z-8-97144-391-0		PLUG	ﾌﾟﾗｸﾞ	AR	A,B,C,E,F L=8.40
33	Z-8-97088-697-0		PIN	ﾋﾟﾝ	1	A,B,C,E,F
34	Z-8-94408-537-0		SPRING	ｽﾌﾟﾘﾝｸﾞ	1	A,B,C,E,F
35	Z-8-94227-636-0		BOLT	ﾎﾞﾙﾄ	4	A,B,C,E,F
36	Z-8-94227-640-0	*	O RING	Oﾘﾝｸﾞ	1	A,B,C,E,F
37	Z-8-94227-641-0	*	O RING	Oﾘﾝｸﾞ	1	A,B,C,E,F
38	Z-8-94227-642-0		VALVE,REGULATING	ﾊﾞﾙﾌﾞ	1	A,B,C,E,F
39	Z-8-94227-644-0		VALVE,OVER FLOW	ﾊﾞﾙﾌﾞ	1	A,B,C,E,F
40	Z-8-97119-187-0		GASKET	ｶﾞｽｹｯﾄ	2	A,B,C,E,F
41	Z-8-94249-955-0		PIPE	ﾊﾟｲﾌﾟ	1	A,B,C,E,F
42	Z-8-94227-643-0		COLLAR	ｶﾗｰ	1	A,B,C,E,F
43	Z-8-94226-565-0		NUT	ﾅｯﾄ	1	A,B,C,E,F
44	Z-8-94226-554-0		WASHER	ﾜｯｼｬ	1	A,B,C,E,F
45	Z-8-97119-187-0		GASKET	ｶﾞｽｹｯﾄ	3	A,B,C,E,F
46	Z-8-94174-824-0		BOLT,EYE	ﾎﾞﾙﾄ	1	A,B,C,E,F
47	Z-8-94243-252-0		PIPE	ﾊﾟｲﾌﾟ	1	A,B,C,E,F
48	Z-8-94227-662-0		SPACER	ｽﾍﾟｰｻ	1	A,B,C,E,F
49	Z-8-97136-414-0		BRACKET	ﾌﾞﾗｹｯﾄ	1	A,B,C,E,F
50	Z-8-97119-344-0		NUT	ﾅｯﾄ	2	A,B,C,E,F
51	Z-9-0956-1353-0		O RING	Oﾘﾝｸﾞ	1	A,B,C,E,F
52	Z-5-12524-066-0		GEAR	ｷﾞﾔｰ	1	A,B,C,F
-	Z-5-12524-066-0		GEAR	ｷﾞﾔｰ	1	E -1999.5
-	Z-8-94227-337-1		GEAR	ｷﾞﾔｰ	1	E 1999.6-
53	Z-8-94228-403-0		FLYWEIGHT	ﾌﾗｲｳｴｲﾄ	1	A,B,C,F
-	Z-8-94228-403-0		FLYWEIGHT	ﾌﾗｲｳｴｲﾄ	1	E -1999.5
-	Z-8-94408-542-0		FLYWEIGHT	ﾌﾗｲｳｴｲﾄ	1	E 1999.6-
54	Z-8-94242-284-0		PLUG	ﾌﾟﾗｸﾞ	1	A,B,C,E,F
55	Z-8-94227-671-0		O RING	Oﾘﾝｸﾞ	1	A,B,C,E,F
56	Z-8-94316-262-0		CAP	ｷｬｯﾌﾟ	1	A,B,C,F
-	Z-8-94316-262-0		CAP	ｷｬｯﾌﾟ	1	E -1999.5
-	Z-8-97214-488-0		CAP	ｷｬｯﾌﾟ	1	E 1999.6-
57	Z-8-94316-263-0		CAP	ｷｬｯﾌﾟ	1	A,B,C,E,F L=18
-	Z-8-94316-264-0		CAP	ｷｬｯﾌﾟ	1	A,B,C,E,F L=21
-	Z-8-94316-265-0		CAP	ｷｬｯﾌﾟ	1	A,B,C,E,F L=24
-	Z-8-94316-266-0		CAP	ｷｬｯﾌﾟ	1	A,B,C,E,F L=27
58	Z-8-94227-337-1		COUPLING	ｶｯﾌﾟﾘﾝｸﾞ	1	A,B,C,F
-	Z-8-94227-337-1		COUPLING	ｶｯﾌﾟﾘﾝｸﾞ	1	E -1999.5

FIG. 20 INJECTION PUMP (2/2)(A,B,C,E,F)
インジェクションポンプ

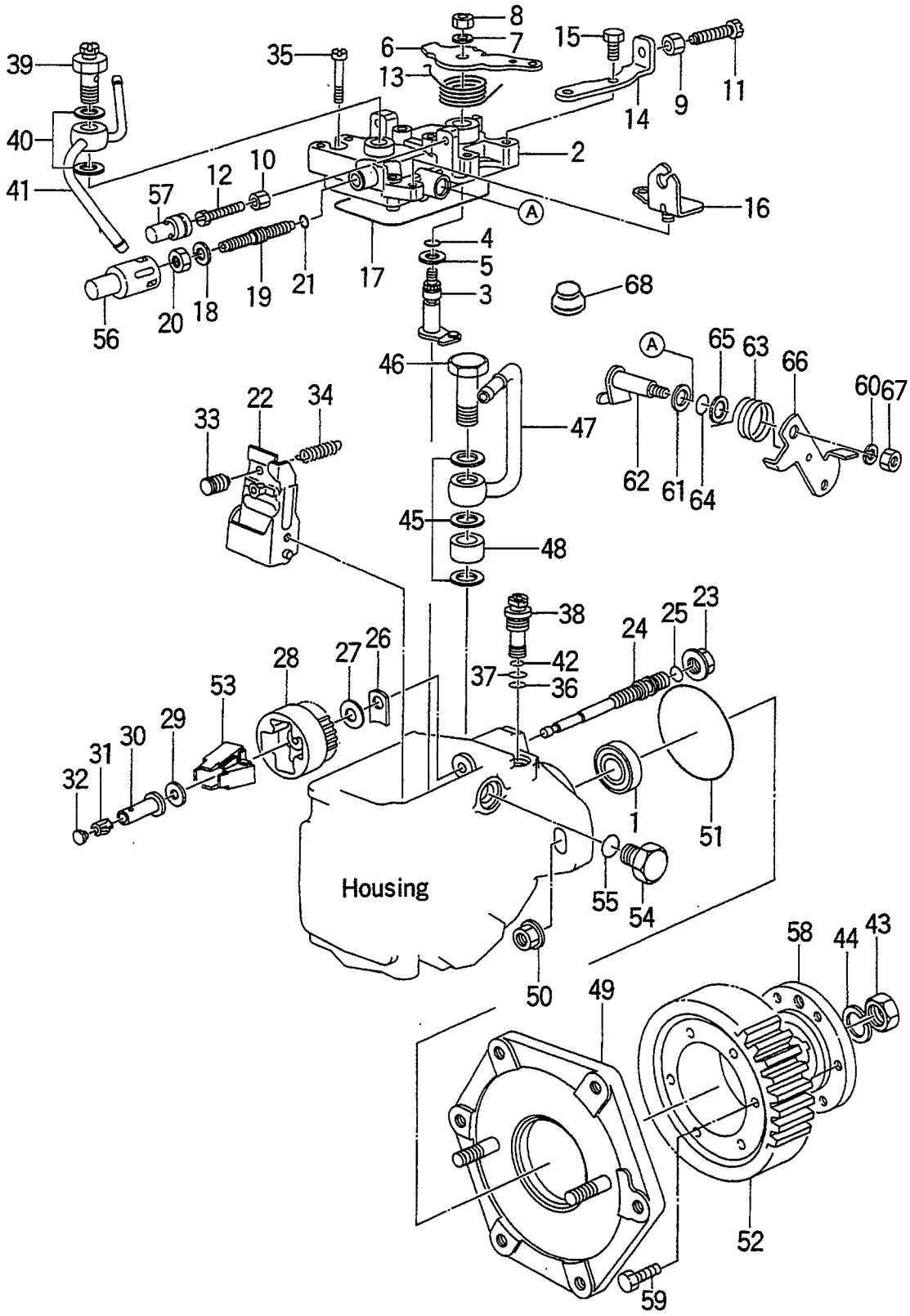

FIG. 20

A: C240PKJ D: C240PKJ-12
B: C240PKJ-06 E: C240PKJ-17
C: C240PKJ-11 F: C240PKJ-20

Item No. 見出番号	Part No. 部品番号	Mark 記号	Description 部品名称		Req'd 個数	Remarks : serial No. 備考：実施号車
58	Z-5-12524-066-0		COUPLING	ｶｯﾌﾟﾘﾝｸﾞ	1	E 1999.6-
59	Z-9-0191-0618-0		BOLT	ﾎﾞﾙﾄ	6	A,B,C,F
-	Z-9-0191-0618-0		BOLT	ﾎﾞﾙﾄ	6	E -1999.5
60	02010-00006		WASHER	ﾜｯｼｬ	1	A,B,C,E,F
61	Z-8-94227-590-0		WASHER	ﾜｯｼｬ	1	A,B,C,E,F
62	Z-8-94433-214-0		SHAFT	ｼｬﾌﾄ	1	A,B,C,E,F
63	Z-8-94433-215-0		SPRING	ｽﾌﾟﾘﾝｸﾞ	1	A,B,C,E,F
64	Z-8-94433-216-0		O RING	Oﾘﾝｸﾞ	1	A,B,C,E,F
65	Z-8-94433-217-0		WASHER	ﾜｯｼｬ	1	A,B,C,E,F
66	Z-8-97063-165-0		LEVER	ﾚﾊﾞｰ	1	A,B,C,E,F
-	Z-8-97063-166-0		LEVER	ﾚﾊﾞｰ	1	A,B,C,E,F
67	Z-1-15729-006-0		NUT	ﾅｯﾄ	1	A,B,C,E,F
68	Z-8-97226-145-0		CAP	ｷｬｯﾌﾟ	1	E 1999.6-

FIG. 21 INJECTION PUMP (D)
ｲﾝｼﾞｪｸｼｮﾝﾎﾟﾝﾌﾟ

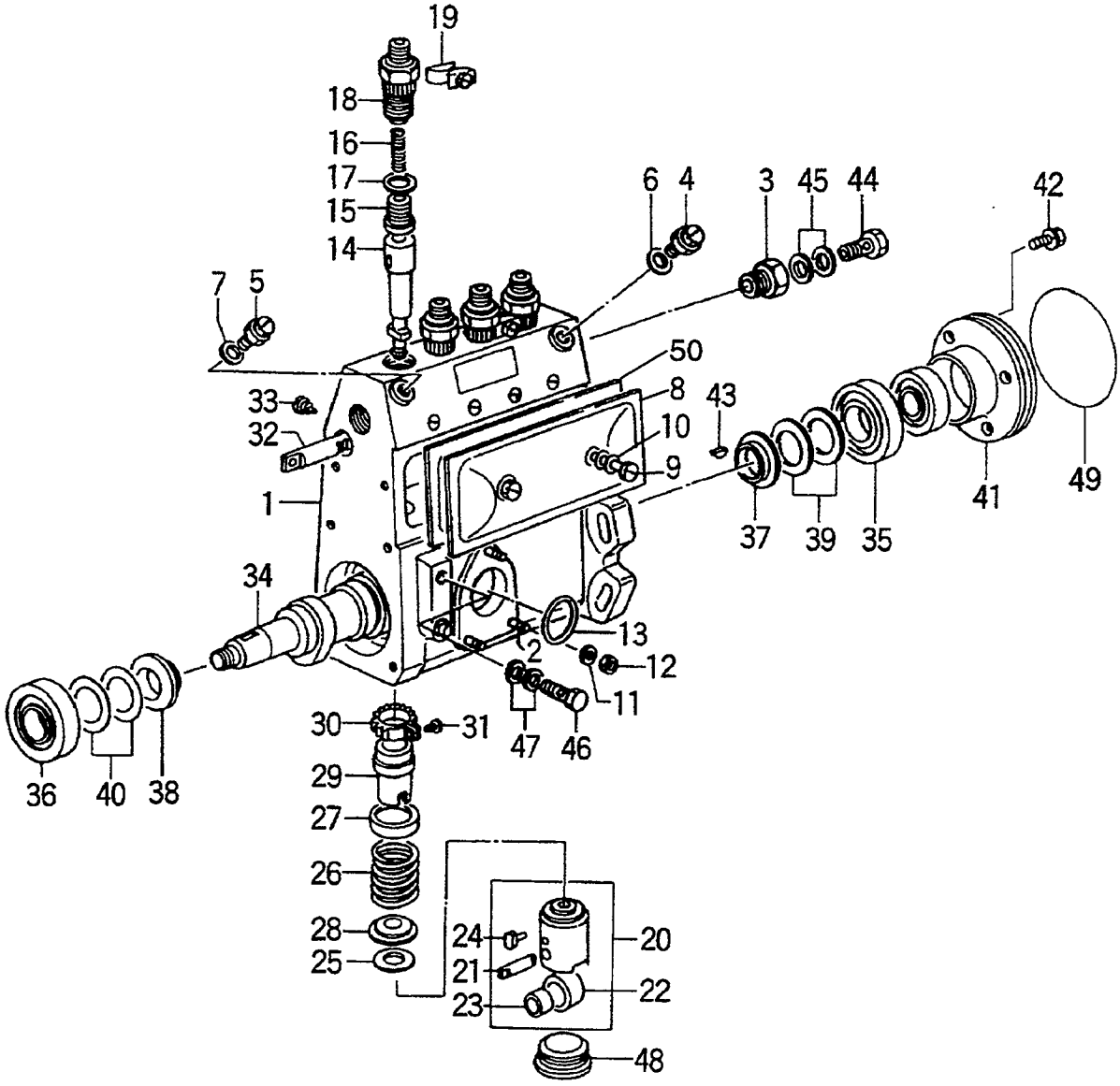

FIG. 21

A: C240PKJ D: C240PKJ-12
B: C240PKJ-06 E: C240PKJ-17
C: C240PKJ-11 F: C240PKJ-20

Item No. 見出番号	Part No. 部品番号	Mark 記号	Description 部品名称		Req'd 個数	Remarks : serial No. 備考：実施号車
A	Z-8-97148-875-0		INJECTION PUMP ASSY	ｲﾝｼﾞｪｸｼｮﾝﾎﾟﾝﾌﾟ ｱｯｾﾝ	1	D INC.1-50
1	Z-5-15611-044-0		HOUSING	ﾊｳｼﾞﾝｸﾞ	1	D INC.2-7
2	Z-9-8121-5115-0		STUD	ｽﾀｯﾄﾞ	3	D
3	Z-9-8123-5017-0		ADAPTER,INJECTION	ｱﾀﾞﾌﾟﾀ	1	D
4	Z-1-15619-024-0		BOLT	ﾎﾞﾙﾄ	1	D
5	Z-1-15619-024-0		BOLT	ﾎﾞﾙﾄ	1	D
6	Z-8-94144-558-0		GASKET	ｶﾞｽｹｯﾄ	1	D
7	Z-8-94144-558-0		GASKET	ｶﾞｽｹｯﾄ	1	D
8	Z-8-94171-109-0		COVER	ｶﾊﾞｰ	1	D INC.50
9	Z-1-15619-003-0		SCREW	ｽｸﾘｭ	2	D
10	Z-9-8121-5144-0		GASKET	ｶﾞｽｹｯﾄ	2	D
11	Z-9-0915-0506-0		WASHER	ﾜｯｼｬ	3	D
12	Z-9-0911-0406-0		NUT	ﾅｯﾄ	3	D
13	Z-1-09623-013-0		O RING	Oﾘﾝｸﾞ	1	D
14	Z-5-15631-009-0		PLUNGER	ﾌﾟﾗﾝｼﾞｬ	4	D
15	Z-9-8124-1103-0		VALVE,DELIVERY	ﾊﾞﾙﾌﾞ	4	D
16	Z-5-15643-002-0		SPRING	ｽﾌﾟﾘﾝｸﾞ	4	D
17	Z-9-8124-5014-0		GASKET	ｶﾞｽｹｯﾄ	4	D
18	Z-5-15644-005-0		HOLDER	ﾎﾙﾀﾞ	4	D
19	Z-5-15625-001-0		PLATE	ﾌﾟﾚｰﾄ	2	D
20	Z-9-8122-1223-0		TAPPET	ﾀﾍﾟｯﾄ	4	P INC.21-24
21	Z-9-8122-2220-0		PIN	ﾋﾟﾝ	4	D
22	Z-1-15622-003-0		ROLLER	ﾛｰﾗ	4	D
23	Z-1-15629-001-0		BUSHING	ﾌﾞｯｼﾝｸﾞ	4	D
24	Z-5-15619-041-0		GUIDE	ｶﾞｲﾄﾞ	4	D
25	Z-5-15619-034-0		SHIM	ｼﾑ	AR	D t=0.30mm
-	Z-5-15619-035-0		SHIM	ｼﾑ	AR	D t=0.40mm
-	Z-5-15619-036-0		SHIM	ｼﾑ	AR	D t=0.50mm
-	Z-5-15619-001-0		SHIM	ｼﾑ	AR	D t=0.60mm
-	Z-5-15619-002-0		SHIM	ｼﾑ	AR	D t=0.70mm
-	Z-5-15619-003-0		SHIM	ｼﾑ	AR	D t=0.80mm
-	Z-5-15619-004-0		SHIM	ｼﾑ	AR	D t=0.90mm
-	Z-5-15619-005-0		SHIM	ｼﾑ	AR	D t=1.00mm
-	Z-5-15619-007-0		SHIM	ｼﾑ	AR	D t=1.10mm
-	Z-5-15619-008-0		SHIM	ｼﾑ	AR	D t=1.20mm

FIG. 21 INJECTION PUMP (D)
ｲﾝｼﾞｪｸｼｮﾝﾎﾟﾝﾌﾟ

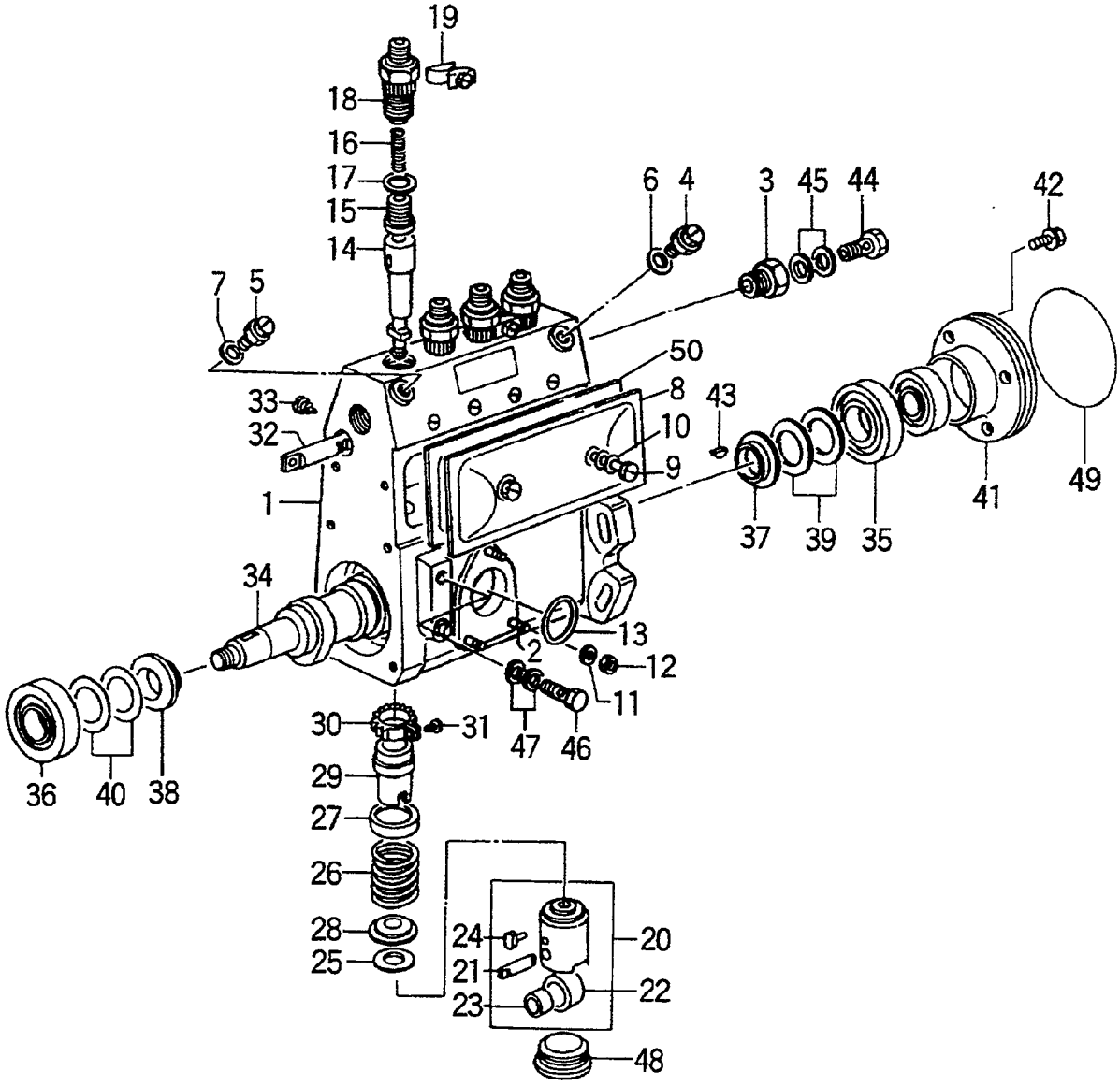

FIG. 21

A: C240PKJ D: C240PKJ-12
B: C240PKJ-06 E: C240PKJ-17
C: C240PKJ-11 F: C240PKJ-20

Item No. 見出番号	Part No. 部品番号	Mark 記号	Description 部品名称		Req'd 個数	Remarks : serial No. 備考：実施号車
25	Z-5-15619-009-0		SHIM	ｼﾑ	AR	D t=1.30mm
-	Z-5-15619-010-0		SHIM	ｼﾑ	AR	D t=1.40mm
-	Z-5-15619-011-0		SHIM	ｼﾑ	AR	D t=0.55mm
-	Z-5-15619-012-0		SHIM	ｼﾑ	AR	D t=0.65mm
-	Z-5-15619-013-0		SHIM	ｼﾑ	AR	D t=0.75mm
-	Z-5-15619-015-0		SHIM	ｼﾑ	AR	D t=0.85mm
-	Z-9-8123-5042-0		SHIM	ｼﾑ	AR	D t=0.95mm
-	Z-9-8123-5043-0		SHIM	ｼﾑ	AR	D t=1.05mm
-	Z-9-8123-5044-0		SHIM	ｼﾑ	AR	D t=1.15mm
-	Z-9-8123-5045-0		SHIM	ｼﾑ	AR	D t=1.25mm
-	Z-5-15619-025-0		SHIM	ｼﾑ	AR	D t=0.20mm
-	Z-5-15619-026-0		SHIM	ｼﾑ	AR	D t=0.25mm
-	Z-5-15619-027-0		SHIM	ｼﾑ	AR	D t=0.35mm
-	Z-5-15619-037-0		SHIM	ｼﾑ	AR	D t=0.45mm
-	Z-5-15619-106-0		SHIM	ｼﾑ	AR	D t=1.5mm
-	Z-5-15619-107-0		SHIM	ｼﾑ	AR	D t=1.6mm
-	Z-5-15619-108-0		SHIM	ｼﾑ	AR	D t=1.35mm
-	Z-5-15619-109-0		SHIM	ｼﾑ	AR	D t=1.45mm
-	Z-5-15619-110-0		SHIM	ｼﾑ	AR	D t=1.55mm
26	Z-5-15643-009-0		SPRING	ｽﾌﾟﾘﾝｸﾞ	4	D
27	Z-9-8123-5015-0		SEAT	ｼｰﾄ	4	D
28	Z-9-8123-5021-0		SEAT	ｼｰﾄ	4	D
29	Z-9-8122-5058-0		SLEEVE	ｽﾘｰﾌﾞ	4	D
30	Z-9-8122-5057-0		PINION	ﾋﾟﾆｵﾝ	4	D
31	Z-9-8123-5003-0		SCREW	ｽｸﾘｭ	4	D
32	Z-5-15637-005-0		CONTROL,BACK	ｺﾝﾄﾛｰﾙ	1	D
33	Z-1-15639-003-0		SCREW	ｽｸﾘｭ	1	D
34	Z-5-15621-017-0		CAM	ｶﾑ	1	D
35	Z-9-00090-677-0		BEARING	ﾍﾞｱﾘﾝｸﾞ	1	D NSK MAKE

FIG. 21 INJECTION PUMP (D)
ｲﾝｼﾞｪｸｼｮﾝﾎﾟﾝﾌﾟ

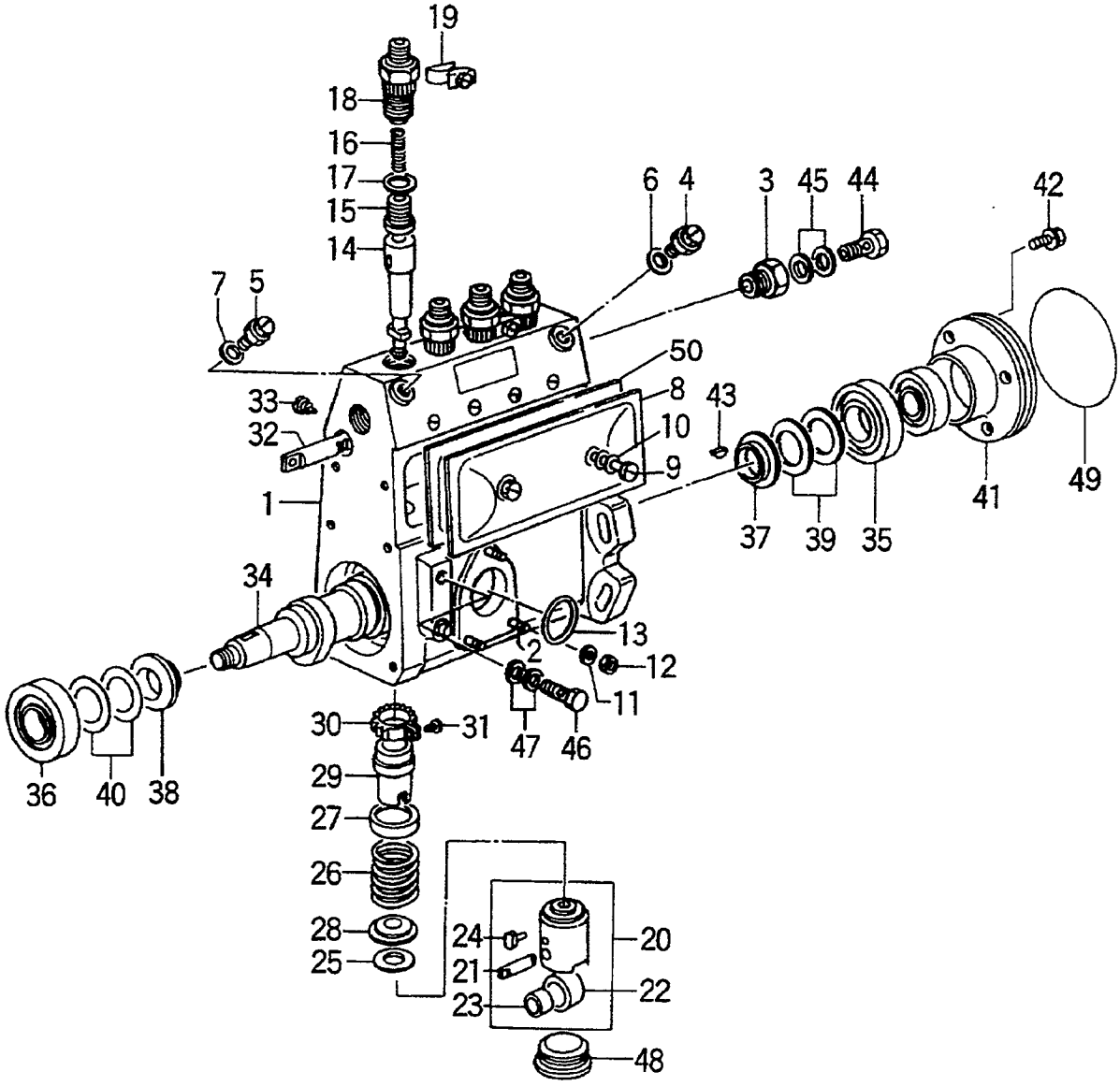

FIG. 21

A: C240PKJ D: C240PKJ-12
B: C240PKJ-06 E: C240PKJ-17
C: C240PKJ-11 F: C240PKJ-20

Item No. 見出番号	Part No. 部品番号	Mark 記号	Description 部品名称		Req'd 個数	Remarks : serial No. 備考：実施号車
35	Z-5-09800-038-0		BEARING	ﾍﾞｱﾘﾝｸﾞ	1	D NTN MAKE
36	Z-9-00090-677-0		BEARING	ﾍﾞｱﾘﾝｸﾞ	1	D NSK MAKE
-	Z-5-09800-038-0		BEARING	ﾍﾞｱﾘﾝｸﾞ	1	D NTN MAKE
37	Z-9-8122-5047-0		RING	ﾘﾝｸﾞ	1	D
38	Z-9-8122-5047-0		RING	ﾘﾝｸﾞ	1	D
39	Z-5-15629-015-0		SHIM	ｼﾑ	AR	D t=0.10mm
-	Z-5-15629-016-0		SHIM	ｼﾑ	AR	D t=0.12mm
-	Z-5-15629-017-0		SHIM	ｼﾑ	AR	D t=0.14mm
-	Z-5-15629-018-0		SHIM	ｼﾑ	AR	D t=0.16mm
-	Z-5-15629-019-0		SHIM	ｼﾑ	AR	D t=0.18mm
-	Z-5-15629-020-0		SHIM	ｼﾑ	AR	D t=0.50mm
-	Z-5-15629-038-0		SHIM	ｼﾑ	AR	D t=1.00mm
-	Z-9-8122-5033-0		SHIM	ｼﾑ	AR	D t=0.30mm
-	Z-5-15619-039-0		SHIM	ｼﾑ	AR	D t=0.70mm
-	Z-1-15629-090-0		SHIM	ｼﾑ	AR	D t=1.40mm
-	Z-1-15639-088-0		SHIM	ｼﾑ	AR	D t=2.40mm
40	Z-5-15629-015-0		SHIM	ｼﾑ	AR	D t=0.10mm
-	Z-5-15629-016-0		SHIM	ｼﾑ	AR	D t=0.12mm
-	Z-5-15629-017-0		SHIM	ｼﾑ	AR	D t=0.14mm
-	Z-5-15629-018-0		SHIM	ｼﾑ	AR	D t=0.16mm
-	Z-5-15629-019-0		SHIM	ｼﾑ	AR	D t=0.18mm
-	Z-5-15629-020-0		SHIM	ｼﾑ	AR	D t=0.50mm
-	Z-5-15629-038-0		SHIM	ｼﾑ	AR	D t=1.00mm
-	Z-5-15629-021-0		SHIM	ｼﾑ	AR	D t=0.30mm
-	Z-9-8122-5033-0		SHIM	ｼﾑ	AR	D t=0.30mm
-	Z-5-15619-039-0		SHIM	ｼﾑ	AR	D t=0.70mm

FIG. 21 INJECTION PUMP (D)
ｲﾝｼﾞｪｸｼｮﾝﾎﾟﾝﾌﾟ

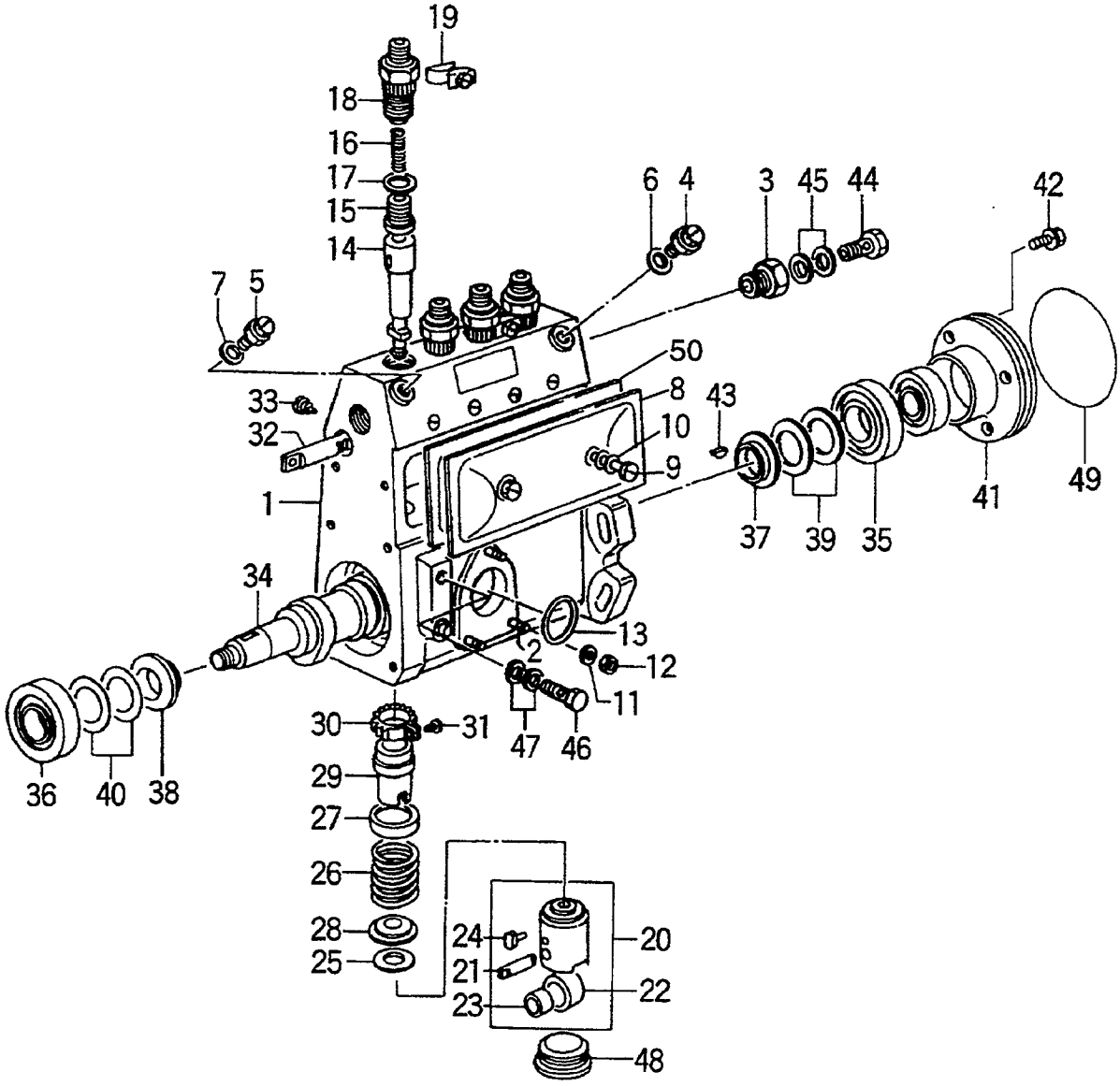

A: C240PKJ D: C240PKJ-12
B: C240PKJ-06 E: C240PKJ-17
C: C240PKJ-11 F: C240PKJ-20

FIG. 21

Item No. 見出番号	Part No. 部品番号	Mark 記号	Description 部品名称		Req'd 個数	Remarks : serial No. 備考：実施号車
40	Z-5-15629-039-0		SHIM	ｼﾑ	AR	D t=0.70mm
-	Z-1-15629-090-0		SHIM	ｼﾑ	AR	D t=1.40mm
-	Z-1-15639-088-0		SHIM	ｼﾑ	AR	D t=2.40mm
41	Z-5-15612-012-0		COVER	ｶﾊﾞｰ	1	D
42	Z-9-0190-0614-0		BOLT	ﾎﾞﾙﾄ	4	D
43	Z-8-94221-411-0		KEY	ｷｰ	1	D
44	Z-1-15619-082-0		BOLT	ﾎﾞﾙﾄ	1	D
45	Z-1-15759-001-0		GASKET	ｶﾞｽｹｯﾄ	2	D
46	Z-9-09706-037-0		BOLT	ﾎﾞﾙﾄ	1	D
47	Z-9-0957-2010-0		GASKET	ｶﾞｽｹｯﾄ	2	D
48	Z-5-15619-136-0		PLUG	ﾌﾟﾗｸﾞ	4	D
49	Z-5-15619-156-0		O RING	Oﾘﾝｸﾞ	1	D
50	Z-8-94386-596-0		GASKET	ｶﾞｽｹｯﾄ	1	D

FIG. 22 GOVERNOR (INNER PARTS) (D)
ｶﾞﾊﾞﾅ(ｲﾝﾅﾊﾟｰﾂ)

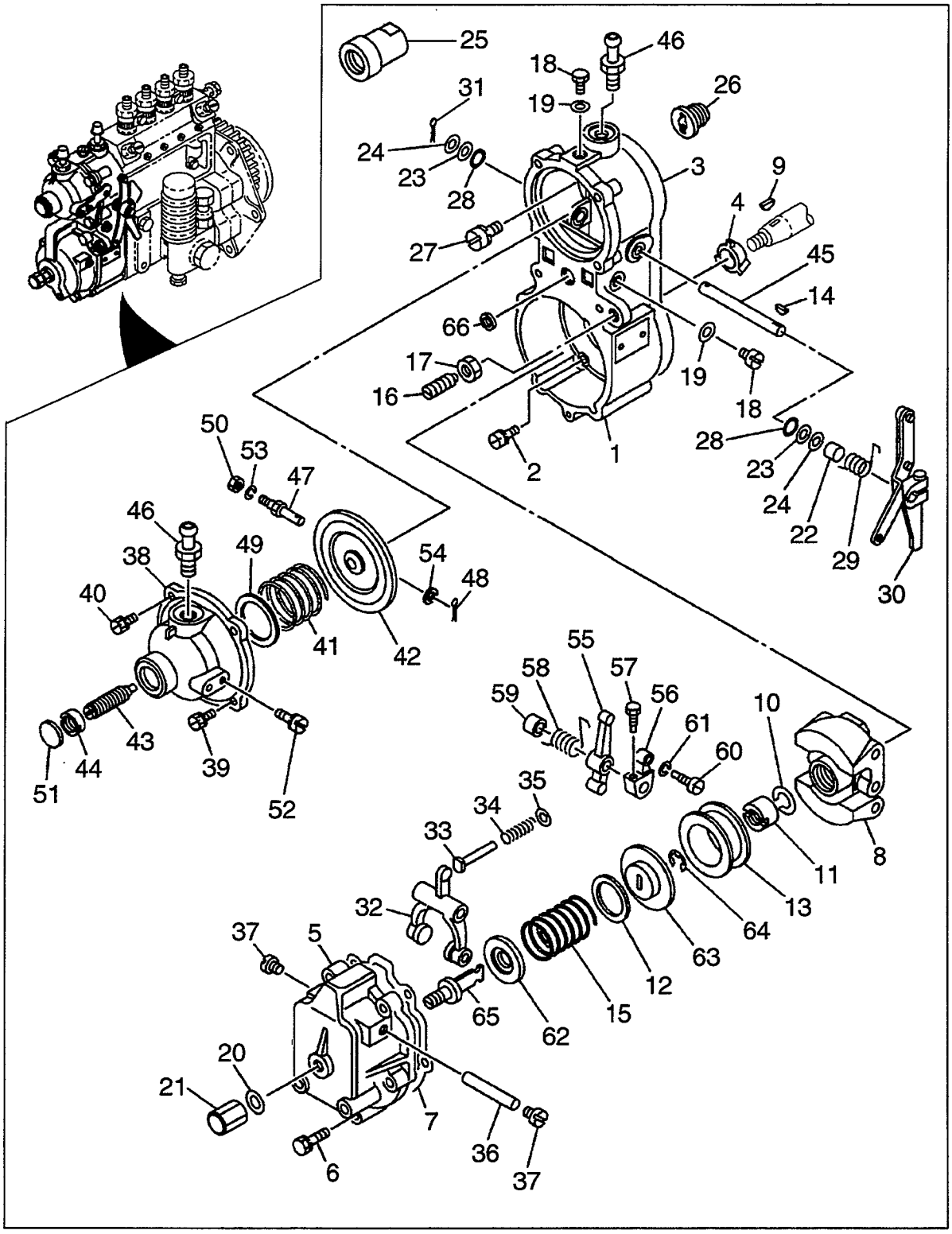

FIG. 22

A: C240PKJ D: C240PKJ-12
B: C240PKJ-06 E: C240PKJ-17
C: C240PKJ-11 F: C240PKJ-20

Item No. 見出番号	Part No. 部品番号	Mark 記号	Description 部品名称		Req'd 個数	Remarks : serial No. 備考：実施号車
A	Z-8-97185-634-0		GOVERNOR ASSY	ｶﾞﾊﾞﾅｱｯｾﾝ	1	D
						INC.1-66
1	Z-9-8131-1158-0		HOUSING	ﾊｳｼﾞﾝｸﾞ	1	D
2	Z-5-15729-027-0		BOLT	ﾎﾞﾙﾄ	4	D
3	Z-5-15729-000-1		GASKET	ｶﾞｽｹｯﾄ	1	D
4	Z-9-8131-5207-0		WHEEL,IMPELLER	ﾎｲｰﾙ	1	D
5	Z-9-8131-3105-0		COVER	ｶﾊﾞｰ	1	D
6	Z-5-15719-019-0		BOLT	ﾎﾞﾙﾄ	5	D
7	Z-5-15719-020-0		GASKET	ｶﾞｽｹｯﾄ	1	D
8	Z-5-15722-002-0		WEIGHT	ｳｴｲﾄ	1	D
9	Z-5-15619-049-0		KEY	ｷｰ	1	D
10	Z-5-15729-034-0		WASHER	ﾜｯｼｬ	1	D
11	Z-9-8132-5086-0		NUT	ﾅｯﾄ	1	D
12	Z-9-8841-0204-0		SHIM	ｼﾑ	AR	D
-	Z-9-8841-0205-0		SHIM	ｼﾑ	AR	D
13	Z-9-8131-5164-0		SLEEVE	ｽﾘｰﾌﾞ	1	D
14	Z-5-15719-010-0		KEY	ｷｰ	1	D
15	Z-8-94148-750-0		SPRING	ｽﾌﾟﾘﾝｸﾞ	1	D
-	Z-8-94148-751-0		SPRING	ｽﾌﾟﾘﾝｸﾞ	1	D
16	Z-9-8841-0257-0		BOLT	ﾎﾞﾙﾄ	1	D
17	Z-9-8131-5181-0		NUT	ﾅｯﾄ	1	D
-	Z-9-8841-0224-0		NUT	ﾅｯﾄ	1	D
18	Z-5-15729-098-0		PLUG	ﾌﾟﾗｸﾞ	2	D
19	Z-5-15729-099-0		GASKET	ｶﾞｽｹｯﾄ	2	D
20	Z-8-97084-347-0		GASKET	ｶﾞｽｹｯﾄ	1	D
21	Z-9-8131-5179-0		NUT	ﾅｯﾄ	1	D
22	Z-5-15712-013-0		COLLAR	ｶﾗｰ	1	D
23	Z-9-8139-1311-0		WASHER	ﾜｯｼｬ	AR	D
24	Z-9-8139-1301-0		SHIM	ｼﾑ	AR	D
						t=0.2mm
-	Z-9-8139-1302-0		SHIM	ｼﾑ	AR	D
						t=0.3mm
25	Z-5-15729-187-0		LIMITER	ﾘﾐｯﾀ	1	D
26	Z-9-8131-5065-0		ADAPTER	ｱﾀﾞﾌﾟﾀ	1	D
27	Z-9-0190-0818-0		BOLT	ﾎﾞﾙﾄ	1	D
28	Z-9-8131-6122-0		GASKET	ｶﾞｽｹｯﾄ	2	D
29	Z-9-8131-1418-0		SPRING	ｽﾌﾟﾘﾝｸﾞ	1	D
30	Z-8-97202-342-0		LEVER	ﾚﾊﾞｰ	1	D
31	Z-9-8131-5191-0		PIN,SPLIT	ﾋﾟﾝ	1	D
32	Z-5-15717-006-0		FORK	ﾌｫｰｸ	1	D
33	Z-1-15729-089-0		ROD,PUSH	ﾛｯﾄﾞ	1	D
-	Z-1-15729-090-0		ROD,PUSH	ﾛｯﾄﾞ	1	D
-	Z-1-15729-091-0		ROD,PUSH	ﾛｯﾄﾞ	1	D
-	Z-9-8131-5184-0		ROD,PUSH	ﾛｯﾄﾞ	1	D
-	Z-9-8131-5185-0		ROD,PUSH	ﾛｯﾄﾞ	1	D
-	Z-9-8131-5228-0		ROD,PUSH	ﾛｯﾄﾞ	1	D
-	Z-9-8131-5229-0		ROD,PUSH	ﾛｯﾄﾞ	1	D
-	Z-9-8131-5241-0		ROD,PUSH	ﾛｯﾄﾞ	1	D
-	Z-9-8131-5230-0		ROD,PUSH	ﾛｯﾄﾞ	1	D
34	Z-9-8131-1415-0		SPRING	ｽﾌﾟﾘﾝｸﾞ	1	D

FIG. 22 GOVERNOR (INNER PARTS) (D)
ｶﾞﾊﾞﾅ(ｲﾝﾅﾊﾟｰﾂ)

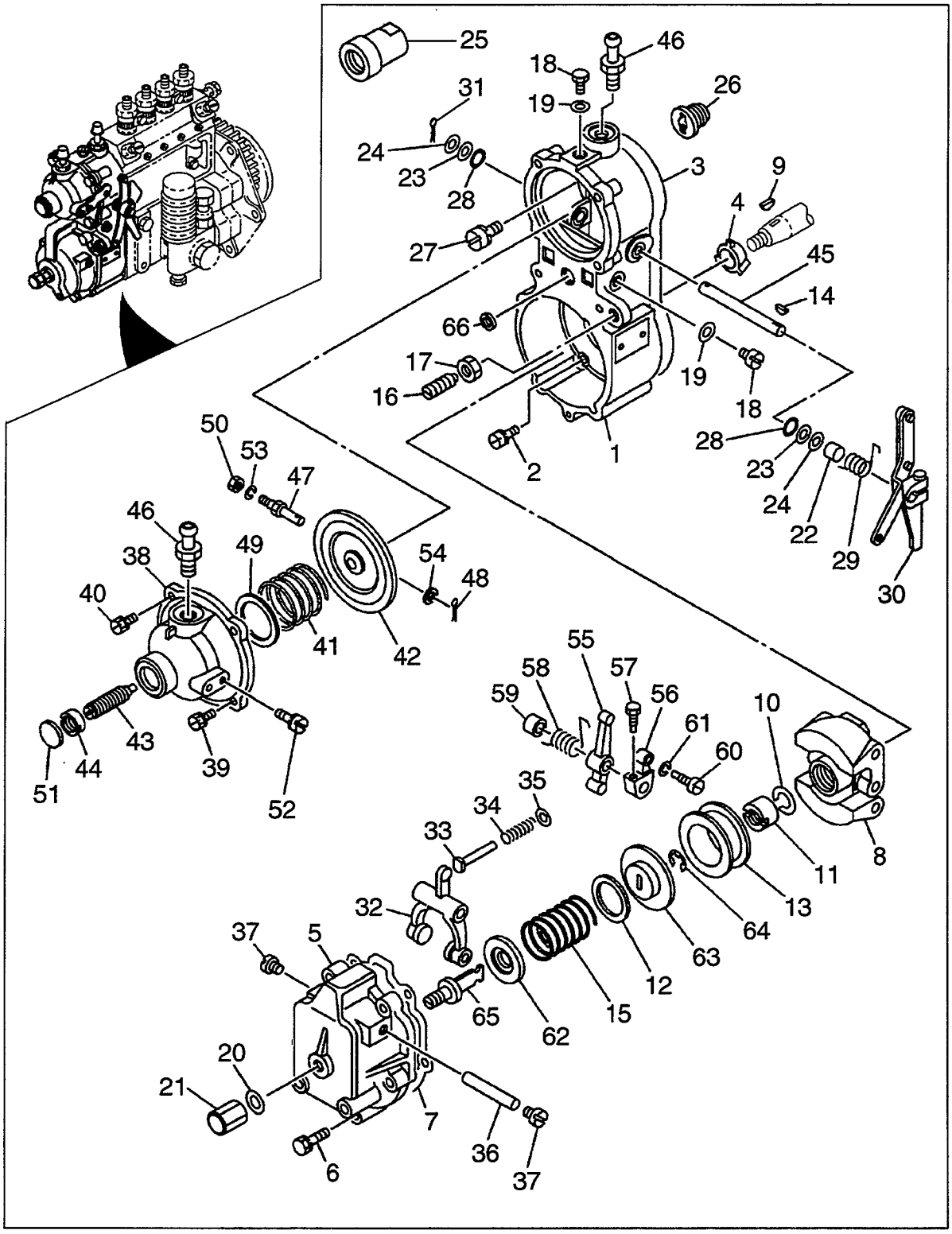

A: C240PKJ D: C240PKJ-12
B: C240PKJ-06 E: C240PKJ-17
C: C240PKJ-11 F: C240PKJ-20

FIG. 22

Item No. 見出番号	Part No. 部品番号	Mark 記号	Description 部品名称		Req'd 個数	Remarks : serial No. 備考：実施号車
35	Z-9-8841-0198-0		WASHER	ﾜｯｼｬ	1	D
36	Z-9-8131-3502-0		SHAFT	ｼｬﾌﾄ	1	D
37	Z-9-8131-6129-0		PLUG	ﾌﾟﾗｸﾞ	2	D
38	Z-9-8131-1166-0		COVER	ｶﾊﾞｰ	1	D
39	Z-5-15719-014-0		BOLT	ﾎﾞﾙﾄ	1	D
40	Z-1-15729-087-0		BOLT	ﾎﾞﾙﾄ	3	D
41	Z-5-15713-010-0		SPRING	ｽﾌﾟﾘﾝｸﾞ	1	D
42	Z-8-94148-747-0		DIAPHRAGM	ﾀﾞｲﾔﾌﾗﾑ	1	D
43	Z-8-94132-742-0		SPRING	ｽﾌﾟﾘﾝｸﾞ	1	D
44	Z-9-8131-5094-0		NUT	ﾅｯﾄ	1	D
45	Z-9-8131-1524-0		SHAFT	ｼｬﾌﾄ	1	D
46	Z-9-8131-5190-0		JOINT	ｼﾞｮｲﾝﾄ	1	D
-	Z-9-09902-260-0		JOINT	ｼﾞｮｲﾝﾄ	1	D
47	Z-9-8131-5211-0		BOLT	ﾎﾞﾙﾄ	1	D
48	Z-9-8131-5191-0		PIN,SPLIT	ﾋﾟﾝ	1	D
49	Z-9-8131-6108-0		SHIM	ｼﾑ	AR	D
-	Z-9-8131-6109-0		SHIM	ｼﾑ	AR	D
-	Z-9-8131-6110-0		SHIM	ｼﾑ	AR	D
-	Z-1-15729-085-0		SHIM	ｼﾑ	AR	D
-	Z-1-15729-086-0		SHIM	ｼﾑ	AR	D
-	Z-9-8131-6111-0		SHIM	ｼﾑ	AR	D
-	Z-9-8131-6112-0		SHIM	ｼﾑ	AR	D
-	Z-9-8131-5120-0		SHIM	ｼﾑ	AR	D
50	Z-9-8841-0466-0		NUT	ﾅｯﾄ	1	D
51	Z-9-8131-6126-0		PLUG	ﾌﾟﾗｸﾞ	1	D
52	Z-5-15619-078-0		SCREW	ｽｸﾘｭ	2	D
53	Z-1-83539-044-0		WASHER	ﾜｯｼｬ	1	D
54	Z-5-15719-011-0		WASHER	ﾜｯｼｬ	1	D
55	Z-9-8131-1751-0		LEVER	ﾚﾊﾞｰ	1	D
56	Z-9-8131-1752-0		LEVER	ﾚﾊﾞｰ	1	D
57	Z-9-8131-5182-0		SCREW	ｽｸﾘｭ	1	D
58	Z-9-8131-1417-0		SPRING	ｽﾌﾟﾘﾝｸﾞ	1	D
59	Z-5-15712-013-0		BUSHING	ﾌﾞｯｼﾝｸﾞ	1	D
60	Z-9-8841-0197-0		BOLT	ﾎﾞﾙﾄ	1	D
61	Z-8-94128-928-0		WASHER	ﾜｯｼｬ	1	D
62	Z-9-8131-5195-0		SEAT,SPRING	ｼｰﾄ	1	D
63	Z-9-8131-5165-0		SEAT,SPRING	ｼｰﾄ	1	D
64	Z-8-94324-735-0		RING,SNAP	ﾘﾝｸﾞ	1	D
65	Z-5-15719-023-0		SCREW	ｽｸﾘｭ	1	D
66	Z-9-8131-6123-0		SEAL,OIL	ｼｰﾙ	1	D

FIG. 23 FEED PUMP (D)
フィード ポンプ

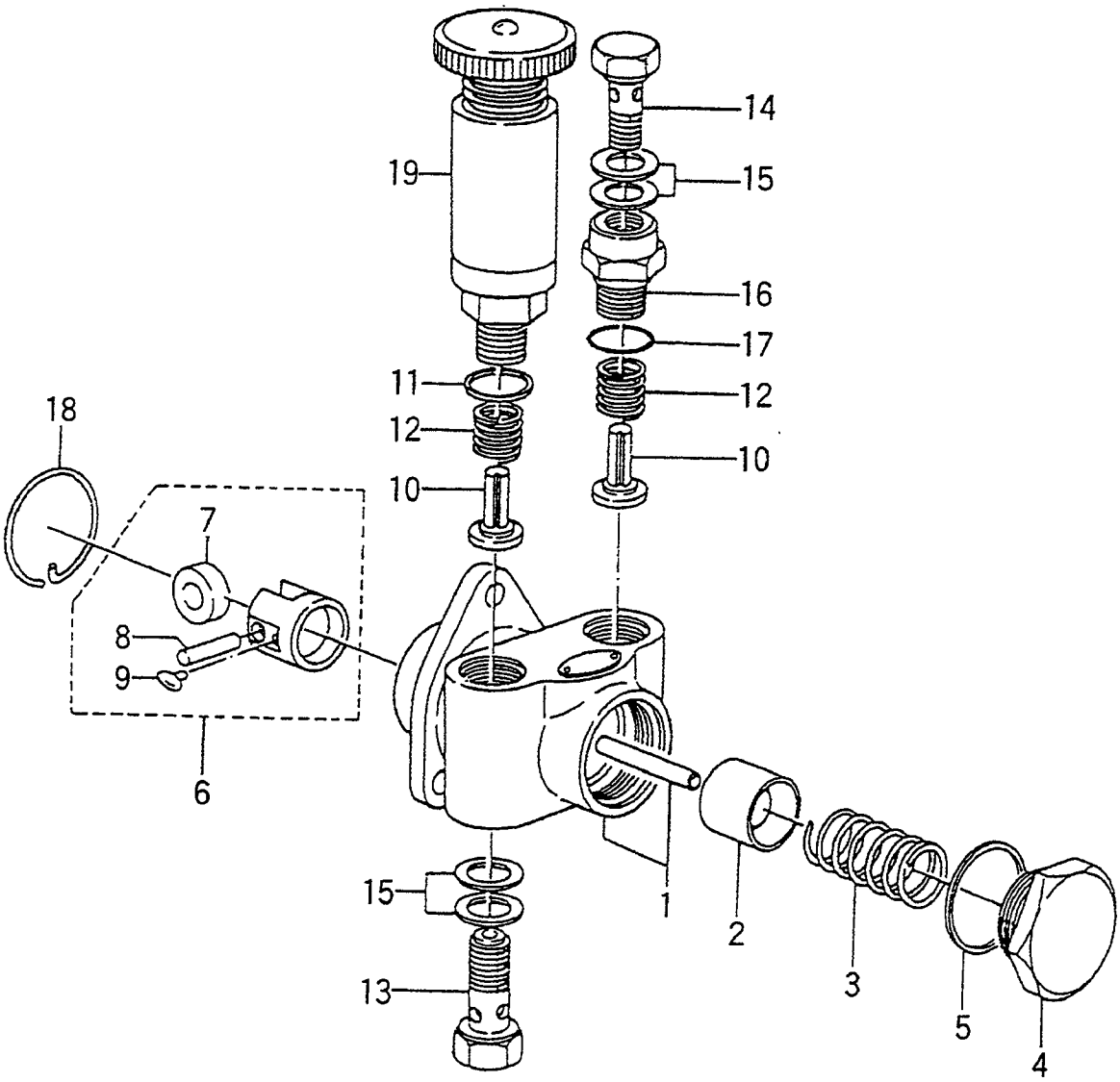

FIG. 23

A: C240PKJ D: C240PKJ-12
B: C240PKJ-06 E: C240PKJ-17
C: C240PKJ-11 F: C240PKJ-20

Item No. 見出番号	Part No. 部品番号	Mark 記号	Description 部品名称		Req'd 個数	Remarks : serial No. 備考：実施号車
A	Z-8-94178-843-0		FEED PUMP ASSY	ﾌｨｰﾄﾞﾎﾟﾝﾌﾟｱｯｾﾝ	1	D
						INC.1-19
1	Z-5-15751-012-0		HOUSING	ﾊｳｼﾞﾝｸﾞ	1	D
2	Z-9-8135-1205-0		PISTON	ﾋﾟｽﾄﾝ	1	D
3	Z-9-8135-1303-0		SPRING	ｽﾌﾟﾘﾝｸﾞ	1	D
4	Z-8-94171-185-0		PLUG	ﾌﾟﾗｸﾞ	1	D
5	Z-9-8135-5035-0		GASKET	ｶﾞｽｹｯﾄ	1	D
6	Z-5-15754-001-0		TAPPET	ﾀﾍﾟｯﾄ	1	D
						INC.7-9
7	Z-9-8135-1403-0		ROLLER	ﾛｰﾗ	1	D
8	Z-9-8135-1410-0		PIN	ﾋﾟﾝ	1	D
9	Z-1-15759-002-0		GUIDE	ｶﾞｲﾄﾞ	2	D
10	Z-9-8135-1602-0		VALVE,PUMP,FEED	ﾊﾞﾙﾌﾞ	2	D
11	Z-1-09623-016-0		O RING	Oﾘﾝｸﾞ	1	D
12	Z-9-8135-1702-0		SPRING	ｽﾌﾟﾘﾝｸﾞ	2	D
13	Z-1-15619-082-0		BOLT,EYE	ﾎﾞﾙﾄ	1	D
14	Z-5-15759-027-0		BOLT,EYE	ﾎﾞﾙﾄ	1	D
15	Z-1-15759-001-0		GASKET	ｶﾞｽｹｯﾄ	4	D
16	Z-1-15759-003-0		ADAPTER	ｱﾀﾞﾌﾟﾀ	1	D
17	Z-1-09623-016-0		O RING	Oﾘﾝｸﾞ	1	D
18	Z-9-8135-5025-0		RING,SNAP	ﾘﾝｸﾞ	1	D
19	Z-8-94131-130-0		PUMP	ﾎﾟﾝﾌﾟ	1	D

FIG. 24 FUEL FILTER (A,B,C,F)
フューエルフィルタ

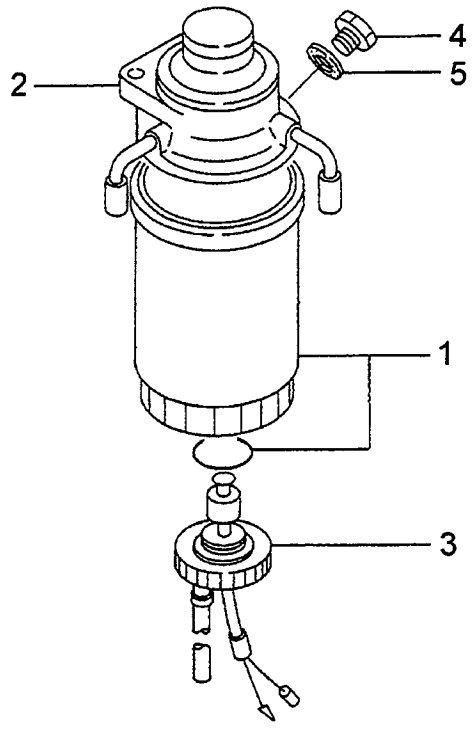

FIG. 24

A: C240PKJ D: C240PKJ-12
B: C240PKJ-06 E: C240PKJ-17
C: C240PKJ-11 F: C240PKJ-20

Item No. 見出番号	Part No. 部品番号	Mark 記号	Description 部品名称		Req'd 個数	Remarks : serial No. 備考：実施号車
A	Z-8-94367-292-2		FUEL FILTER ASSY	ﾌｭｰｴﾙﾌｨﾙﾀｱｯｾﾝ	1	A,B,C,F
						INC.1-5
1	20801-02141		CARTRIDGE	ｶｰﾄﾘｯｼﾞ	1	A,B,C,F
2	Z-8-94367-293-3		BODY,FILTER	ﾎﾞﾃﾞｰ	1	A,B,C,F
						INC.4,5
3	Z-8-94367-294-0		SENSOR	ｾﾝｻ	1	A,B,C,F
4	Z-8-94132-674-0		PLUG	ﾌﾟﾗｸﾞ	1	A,B,C,F
5	Z-8-94132-675-0		GASKET	ｶﾞｽｹｯﾄ	1	A,B,C,F

FIG. 25 FUEL FILTER (D)
フューエルフィルタ

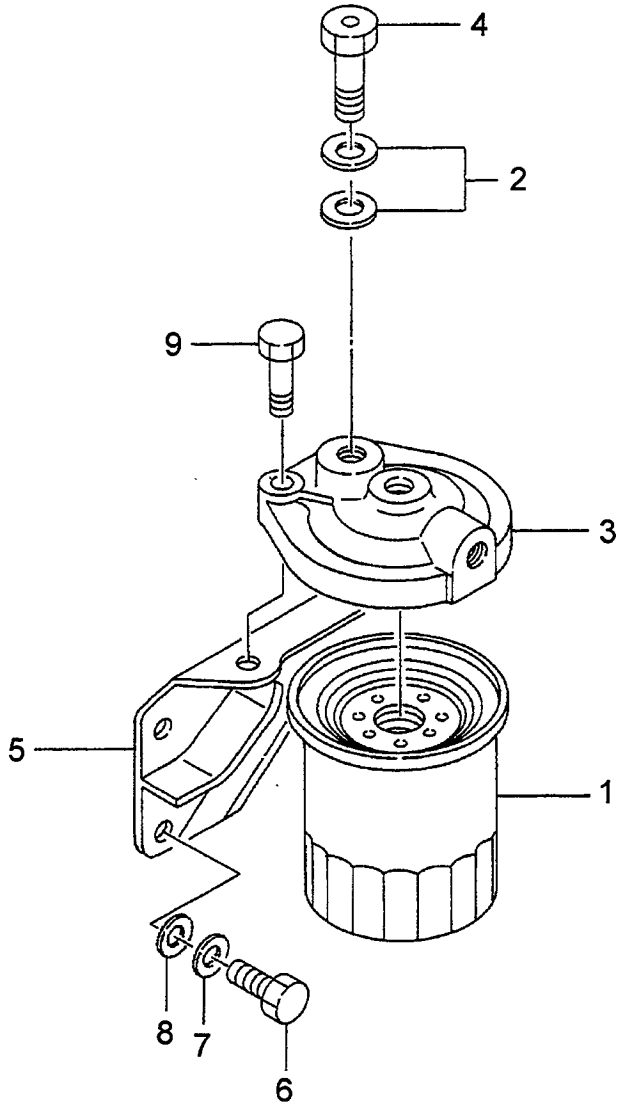

FIG. 25

A: C240PKJ D: C240PKJ-12
B: C240PKJ-06 E: C240PKJ-17
C: C240PKJ-11 F: C240PKJ-20

Item No. 見出番号	Part No. 部品番号	Mark 記号	Description 部品名称		Req'd 個数	Remarks : serial No. 備考：実施号車
A	Z-8-94151-745-1		FUEL FILTER ASSY	ﾌｭｰｴﾙﾌｨﾙﾀｱｯｾﾝ	1	D
						INC.1-4
1	20801-02021		FILTER,FUEL	ﾌｨﾙﾀ	1	D
2	Z-9-0957-2014-0		PACKING	ﾊﾟｯｷﾝｸﾞ	2	D
3	Z-5-13212-075-1		COVER	ｶﾊﾞｰ	1	D
4	Z-9-13260-056-2		VALVE,OVER FLOW	ﾊﾞﾙﾌﾞ	1	D
5	Z-9-19751-801-0		BRACKET	ﾌﾞﾗｹｯﾄ	1	D
6	Z-0-2869-0820-0		BOLT	ﾎﾞﾙﾄ	2	D
7	Z-0-2869-0820-0		WASHER	ﾜｯｼｬ	2	D
8	Z-9-0916-4508-0		WASHER	ﾜｯｼｬ	2	D
9	Z-0-2868-1035-0		BOLT	ﾎﾞﾙﾄ	2	D

FIG. 26 FUEL FILTER (E)
フューエルフィルタ

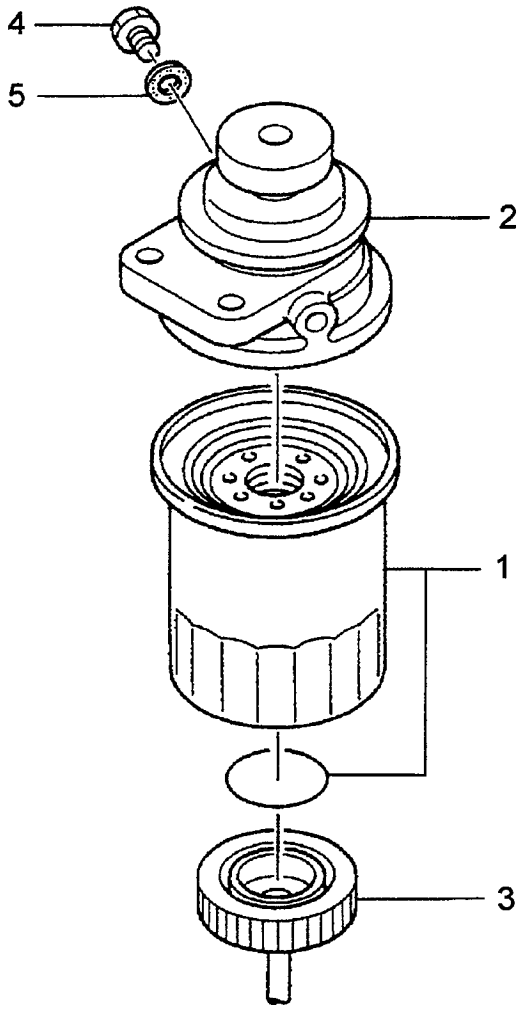

FIG. 26

A: C240PKJ D: C240PKJ-12
B: C240PKJ-06 E: C240PKJ-17
C: C240PKJ-11 F: C240PKJ-20

Item No. 見出番号	Part No. 部品番号	Mark 記号	Description 部品名称		Req'd 個数	Remarks : serial No. 備考：実施号車
A	Z-8-94313-442-0		FUEL FILTER ASSY	ﾌｭｰｴﾙﾌｨﾙﾀｱｯｾﾝ	1	E
						INC.1-5
1	20801-02131		CARTRIDGE	ｶｰﾄﾘｯｼﾞ	1	E
2	Z-8-94313-443-0		BODY	ﾎﾞﾃﾞｰ	1	E
3	Z-8-94419-533-1		SENSOR	ｾﾝｻ	1	E
4	Z-8-94132-674-0		PLUG	ﾌﾟﾗｸﾞ	1	E
5	Z-8-94132-675-0		GASKET	ｶﾞｽｹｯﾄ	1	E

FIG. 27 STARTER,GENERATOR & ELECTRICAL PARTS
スタータ,ジェネレータ&エレクトリカルパーツ

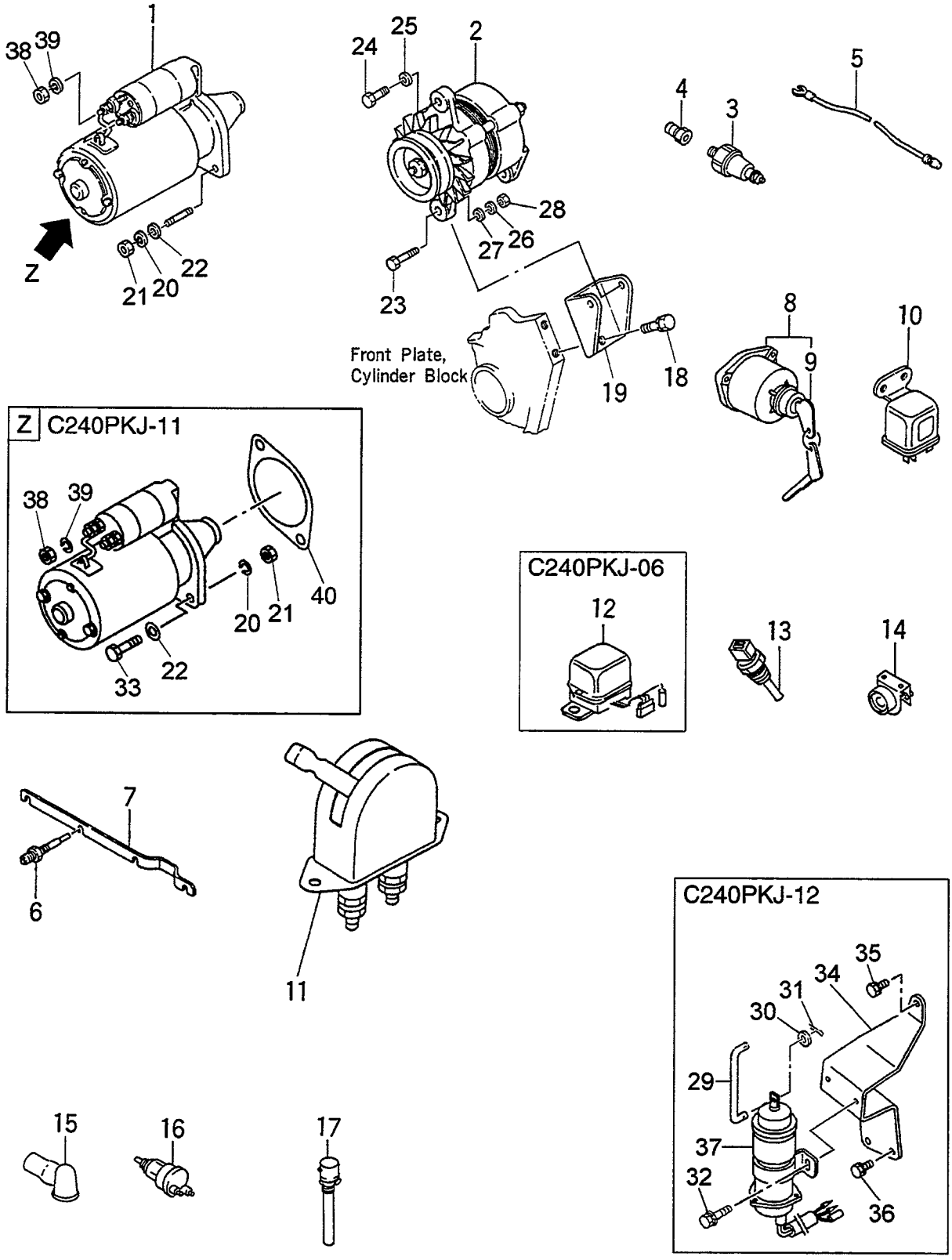

A: C240PKJ D: C240PKJ-12
B: C240PKJ-06 E: C240PKJ-17
C: C240PKJ-11 F: C240PKJ-20

Item No. 見出番号	Part No. 部品番号	Mark 記号	Description 部品名称		Req'd 個数	Remarks : serial No. 備考：実施号車
1	Z-8-97112-865-2		STARTER	ｽﾀｰﾀ	1	A,B,E,F
						SEE FIG.28
-	55593-62371		STARTER	ｽﾀｰﾀ	1	C
						SEE FIG.29
-	Z-5-81100-129-2		STARTER	ｽﾀｰﾀ	1	D
						SEE FIG.30
2	Z-5-81200-341-1		GENERATOR	ｼﾞｪﾈﾚｰﾀ	1	A,C,E,F
						SEE FIG.31
-	53652-60112		GENERATOR	ｼﾞｪﾈﾚｰﾀ	1	B
						SEE FIG.32
-	Z-5-81200-335-0		GENERATOR	ｼﾞｪﾈﾚｰﾀ	1	D
						SEE FIG.31
A	Z-5-82410-012-2		SWITCH ASSY	ｽｲｯﾁｱｯｾﾝ	1	INC.3,4
3	Z-1-82410-008-2		SWITCH,OIL PRESSURE	ｽｲｯﾁ	1	
4	Z-9-09902-238-0		ADAPTER	ｱﾀﾞﾌﾟﾀ	1	
5	Z-5-82650-093-0		CABLE	ｹｰﾌﾞﾙ	1	
6	20801-0A071		PLUG,GLOW	ﾌﾟﾗｸﾞ	4	A,B,C,E,F
-	Z-8-97161-465-0		PLUG,GLOW	ﾌﾟﾗｸﾞ	4	D
7	Z-9-19732-610-0		CONNECTOR	ｺﾈｸﾀ	4	
8	20802-42161		SWITCH,STARTER	ｽｲｯﾁ	1	D
						INC.9
9	Z-8-94402-498-0		KEY	ｷｰ	1	D
10	25952-42411		RELAY	ﾘﾚｰ	1	D
11	225R2-40201		SWITCH	ｽｲｯﾁ	1	D
12	22452-42021		REGULATOR	ﾚｷﾞｭﾚｰﾀ	1	B
13	Z-8-97069-786-1		SWITCH,THERMO	ｽｲｯﾁ	1	A,B,C,E,F
14	Z-9-8253-0046-0		RESISTANCE	ﾚｼﾞｽﾀﾝｽ	1	D
15	Z-9-8295-1322-0		CAP	ｷｬｯﾌﾟ	2	D
16	Z-1-82450-018-0		SWITCH,THERMO	ｽｲｯﾁ	1	D
17	Z-1-81900-234-0		HEATER	ﾋｰﾀ	1	D
18	Z-0-2868-1025-0		BOLT&WASHER	ﾎﾞﾙﾄ&ﾜｯｼｬ	2	
19	Z-5-19711-094-1		BRACKET	ﾌﾞﾗｹｯﾄ	1	
20	Z-9-0915-0512-0		WASHER	ﾜｯｼｬ	2	
21	Z-9-9911-0412-0		NUT	ﾅｯﾄ	2	
22	Z-9-0916-0512-0		WASHER	ﾜｯｼｬ	2	
23	Z-0-2868-0840-0		BOLT	ﾎﾞﾙﾄ	2	
24	Z-0-5004-0822-0		BOLT	ﾎﾞﾙﾄ	1	-2000.2
-	Z-0-5004-0832-0		BOLT	ﾎﾞﾙﾄ	1	2000.3-
25	Z-9-0916-4708-0		WASHER	ﾜｯｼｬ	1	
26	Z-9-0915-0508-0		WASHER	ﾜｯｼｬ	2	
27	Z-9-0916-0508-0		WASHER	ﾜｯｼｬ	2	
28	Z-9-0911-0508-0		NUT	ﾅｯﾄ	2	
29	Z-5-15543-002-0		ROD	ﾛｯﾄﾞ	1	D
30	Z-9-0916-0506-0		WASHER	ﾜｯｼｬ	2	D
31	Z-9-0811-1612-0		PIN,COTTER	ﾋﾟﾝ	2	D
32	Z-0-2808-0612-0		BOLT&WASHER	ﾎﾞﾙﾄ&ﾜｯｼｬ	2	D
33	Z-0-2868-1240-0		BOLT	ﾎﾞﾙﾄ	2	C
34	Z-5-19781-007-0		BRACKET	ﾌﾞﾗｹｯﾄ	1	D
35	Z-0-2868-0825-0		BOLT	ﾎﾞﾙﾄ	1	D
36	Z-0-2868-1020-0		BOLT	ﾎﾞﾙﾄ	2	D

FIG. 27 STARTER,GENERATOR & ELECTRICAL PARTS
スタータ,ジェネレータ&エレクトリカルパーツ

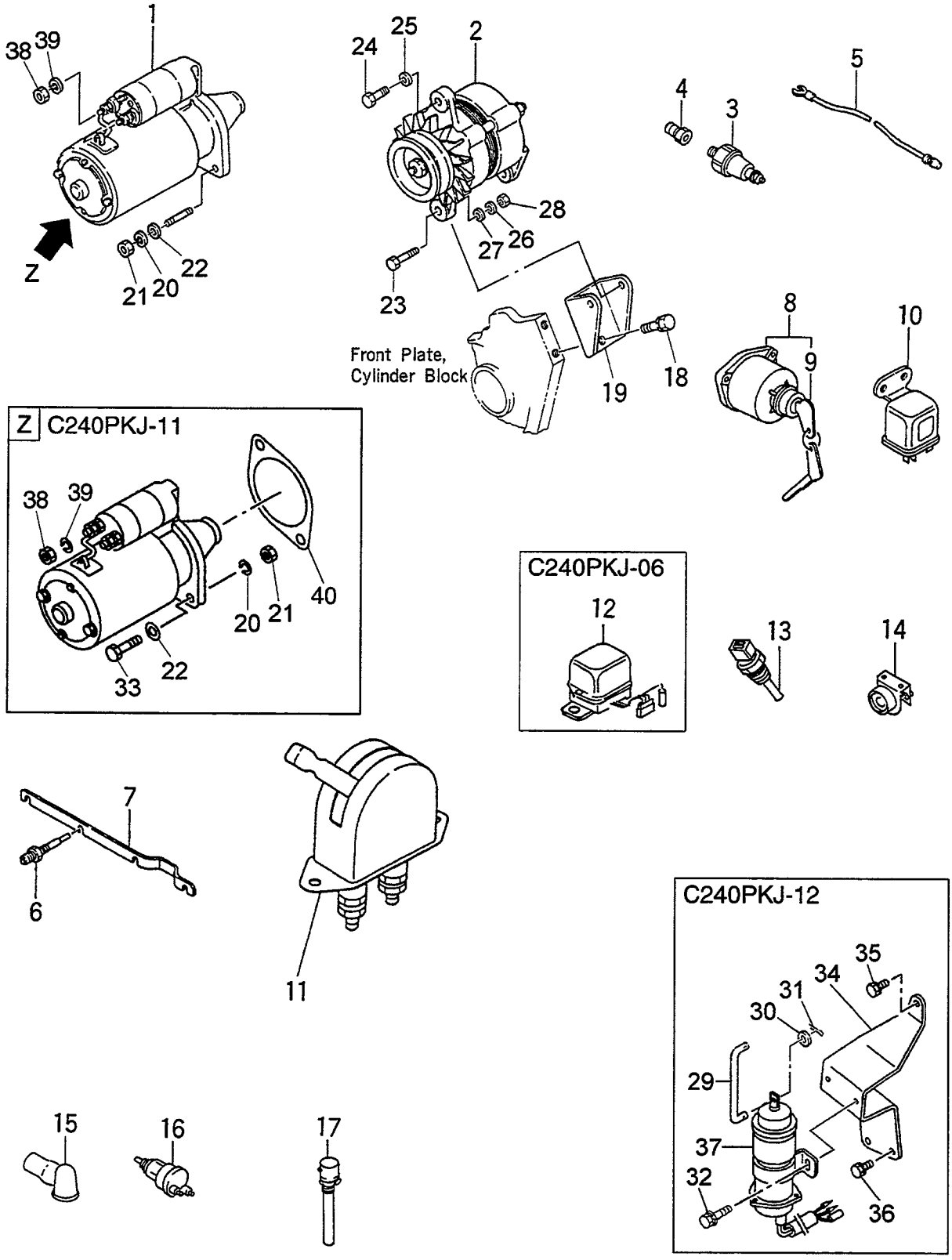

FIG. 27

A: C240PKJ D: C240PKJ-12
B: C240PKJ-06 E: C240PKJ-17
C: C240PKJ-11 F: C240PKJ-20

Item No. 見出番号	Part No. 部品番号	Mark 記号	Description 部品名称		Req'd 個数	Remarks : serial No. 備考：実施号車
37	Z-1-81910-052-0		SOLENOID,ENG. STOP	ｿﾚﾉｲﾄﾞ	1	D
38	01402-00008		NUT	ﾅｯﾄ	1	
39	Z-9-0915-0508-0		WASHER	ﾜｯｼｬ	1	
40	Z-8-97109-380-0		SPACER	ｽﾍﾟｰｻ	1	C

FIG. 28 STARTER (INNER PARTS)(A,B,E,F)
スタータ(インナパーツ)

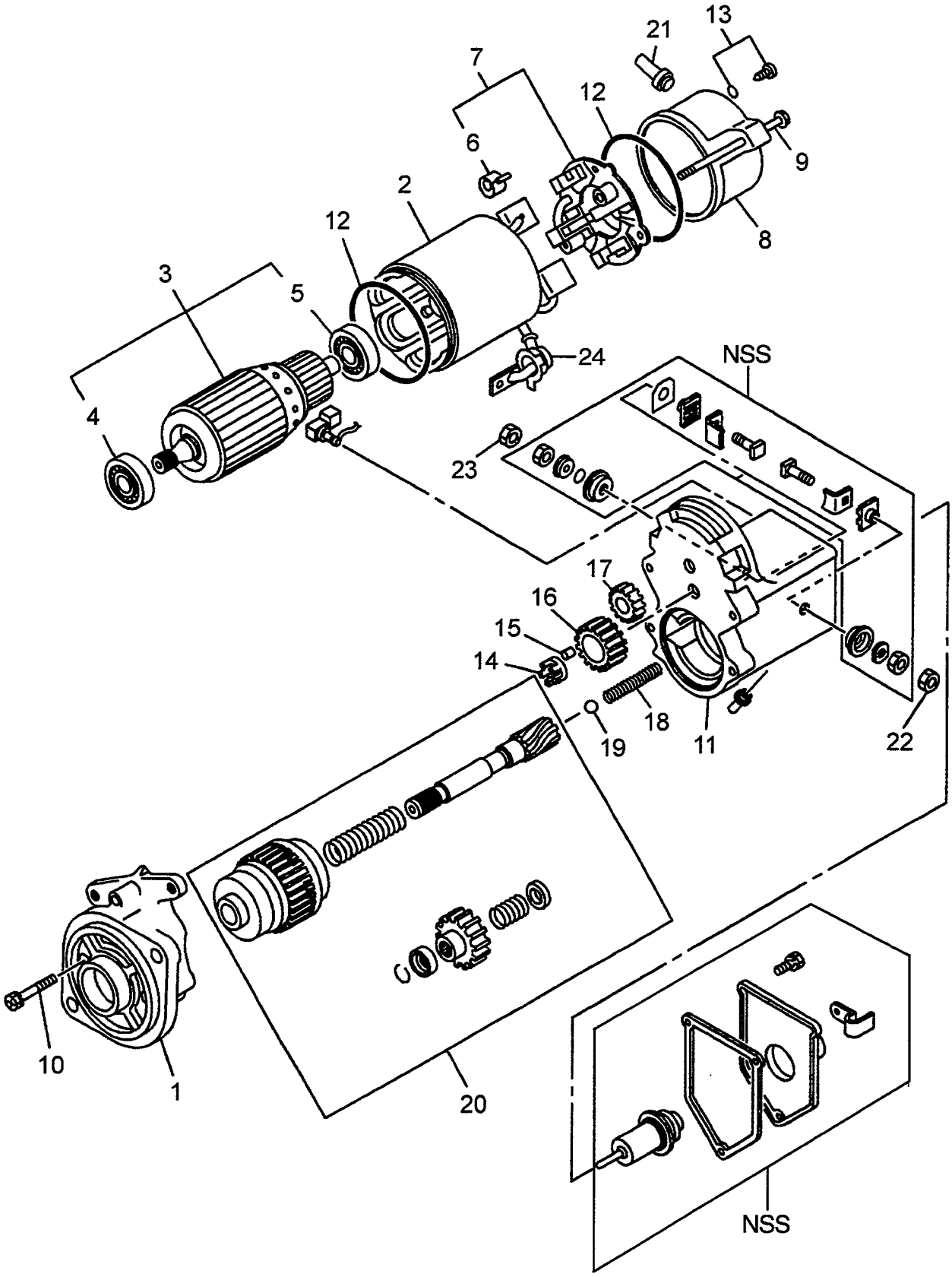

NSS：単体販売しません。Not sold separately.

FIG. 28

A: C240PKJ D: C240PKJ-12
B: C240PKJ-06 E: C240PKJ-17
C: C240PKJ-11 F: C240PKJ-20

Item No. 見出番号	Part No. 部品番号	Mark 記号	Description 部品名称		Req'd 個数	Remarks : serial No. 備考：実施号車
A	Z-8-97112-865-2		STARTER ASSY	ｽﾀｰﾀｱｯｾﾝ	1	A,B,E,F
						INC.1-24
1	Z-8-97112-871-0		CASE,PINION	ｹｰｽ	1	A,B,E,F
2	Z-8-97135-497-0		YOKE	ﾖｰｸ	1	A,B,E,F
3	Z-8-97112-869-0		ARMATURE	ｱｰﾏﾁｭｱ	1	A,B,E,F
						INC.4,5
4	Z-8-94377-240-0		BEARING	ﾍﾞｱﾘﾝｸﾞ	1	A,B,E,F
5	Z-8-97112-954-0		BEARING	ﾍﾞｱﾘﾝｸﾞ	1	A,B,E,F
6	Z-8-97112-880-0		SPRING,BRUSH	ｽﾌﾟﾘﾝｸﾞ	4	A,B,E,F
7	Z-8-97112-873-0		HOLDER,BRUSH	ﾎﾙﾀﾞ	1	A,B,E,F
						INC.6
8	Z-8-97112-875-0		COVER	ｶﾊﾞｰ	1	A,B,E,F
9	Z-8-97112-957-0		BOLT	ﾎﾞﾙﾄ	2	A,B,E,F
10	Z-8-97112-881-0		BOLT	ﾎﾞﾙﾄ	2	A,B,E,F
11	Z-8-97112-872-0		SWITCH,ENGAGE	ｽｲｯﾁ	1	A,B,E,F
12	Z-8-94170-214-0		GASKET	ｶﾞｽｹｯﾄ	2	A,B,E,F
13	Z-8-97142-903-0		SCREW	ｽｸﾘｭ	2	A,B,E,F
14	Z-8-94377-246-0		RETAINER	ﾘﾃｰﾅ	1	A,B,E,F
15	Z-5-81129-099-0		ROLLER	ﾛｰﾗ	5	A,B,E,F
16	Z-8-97078-649-0		GEAR	ｷﾞﾔｰ	1	A,B,E,F
17	Z-8-97112-879-0		GEAR	ｷﾞﾔｰ	1	A,B,E,F
18	Z-8-94377-245-0		SPRING,PINION	ｽﾌﾟﾘﾝｸﾞ	1	A,B,E,F
19	Z-5-81129-092-0		BALL,PINION	ﾎﾞｰﾙ	1	A,B,E,F
20	Z-8-97112-870-0		CLUTCH,PINION	ｸﾗｯﾁ	1	A,B,E,F
21	Z-8-94377-239-0		PIPE,DRAIN	ﾊﾟｲﾌﾟ	1	A,B,E,F
22	Z-8-94109-763-0		NUT	ﾅｯﾄ	1	A,B,E,F
23	Z-8-94377-238-0		NUT	ﾅｯﾄ	1	A,B,E,F
24	Z-5-81119-029-0		COVER	ｶﾊﾞｰ	1	A,B,E,F

FIG. 29 STARTER (INNER PARTS)(C)
スタータ(インナパーツ)

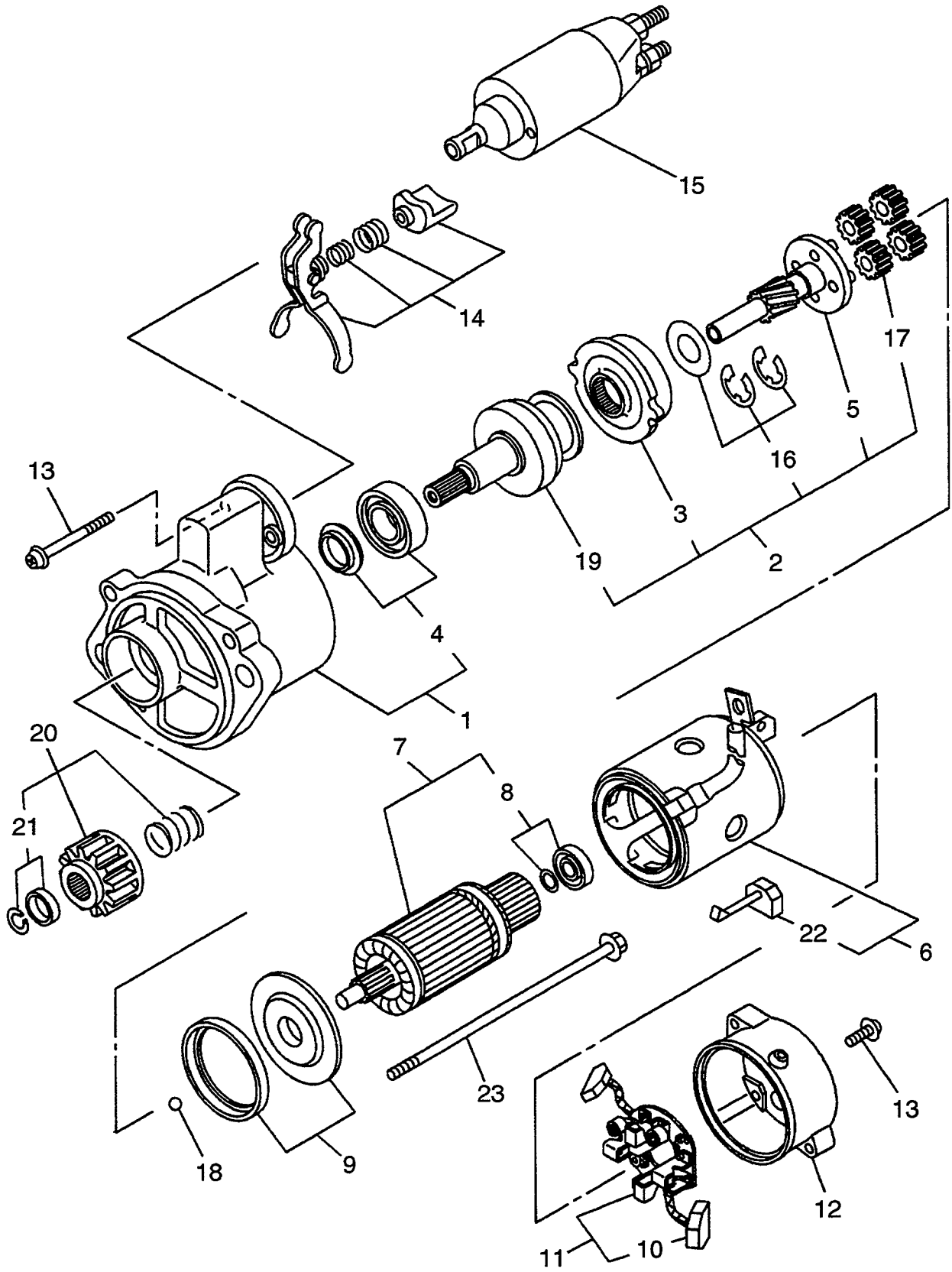

FIG. 29

A: C240PKJ D: C240PKJ-12
B: C240PKJ-06 E: C240PKJ-17
C: C240PKJ-11 F: C240PKJ-20

Item No. 見出番号	Part No. 部品番号	Mark 記号	Description 部品名称		Req'd 個数	Remarks : serial No. 備考：実施号車
A	55593-62371		STARTER ASSY	ｽﾀｰﾀｱｯｾﾝ	1	C
						INC.1-23
1	Z-8-97210-994-0		CASE	ｹｰｽ	1	C
						INC.4
2	Z-8-97145-324-0		CLUTCH	ｸﾗｯﾁ	1	C
						INC.3,5,16,17,19
3	Z-8-97116-485-0		GEAR	ｷﾞﾔｰ	1	C
4	Z-8-97145-323-0		BEARING	ﾍﾞｱﾘﾝｸﾞ	1	C
5	Z-8-97116-483-0		SHAFT	ｼｬﾌﾄ	1	C
6	Z-8-97210-992-0		YOKE	ﾖｰｸ	1	C
						INC.22
7	Z-8-97172-052-0		ARMATURE	ｱｰﾏﾁｭｱ	1	C
						INC.8
8	Z-8-97116-491-0		BEARING	ﾍﾞｱﾘﾝｸﾞ	1	C
9	Z-8-97116-489-0		WASHER	ﾜｯｼｬ	1	C
10	Z-8-97172-056-0		SPRING	ｽﾌﾟﾘﾝｸﾞ	4	C
11	Z-8-97172-055-0		HOLDER	ﾎﾙﾀﾞ	1	C
						INC.10
12	Z-8-97210-917-0		COVER	ｶﾊﾞｰ	1	C
13	Z-8-97116-495-0		BOLT	ﾎﾞﾙﾄ	1	C
14	Z-8-97172-048-0		LEVER	ﾚﾊﾞｰ	1	C
15	Z-8-97172-050-0		SWITCH	ｽｲｯﾁ	1	C
16	Z-8-97116-484-0		RETAINER	ﾘﾃｰﾅ	1	C
17	Z-8-97116-490-0		GEAR	ｷﾞﾔｰ	4	C
18	Z-8-97116-515-0		BALL	ﾎﾞｰﾙ	1	C
19	Z-8-97145-325-0		CLUTCH	ｸﾗｯﾁ	1	C
20	Z-8-97137-606-0		PINION	ﾋﾟﾆｵﾝ	1	C
						INC.21
21	Z-8-94475-688-0		STOPPER SET	ｽﾄｯﾊﾟｾｯﾄ	1	C
22	Z-8-97172-058-0		BRUSH	ﾌﾞﾗｼ	2	C
23	Z-8-94475-698-0		BOLT	ﾎﾞﾙﾄ	1	C

FIG. 30 STARTER (INNER PARTS)(D)
スタータ(インナパーツ)

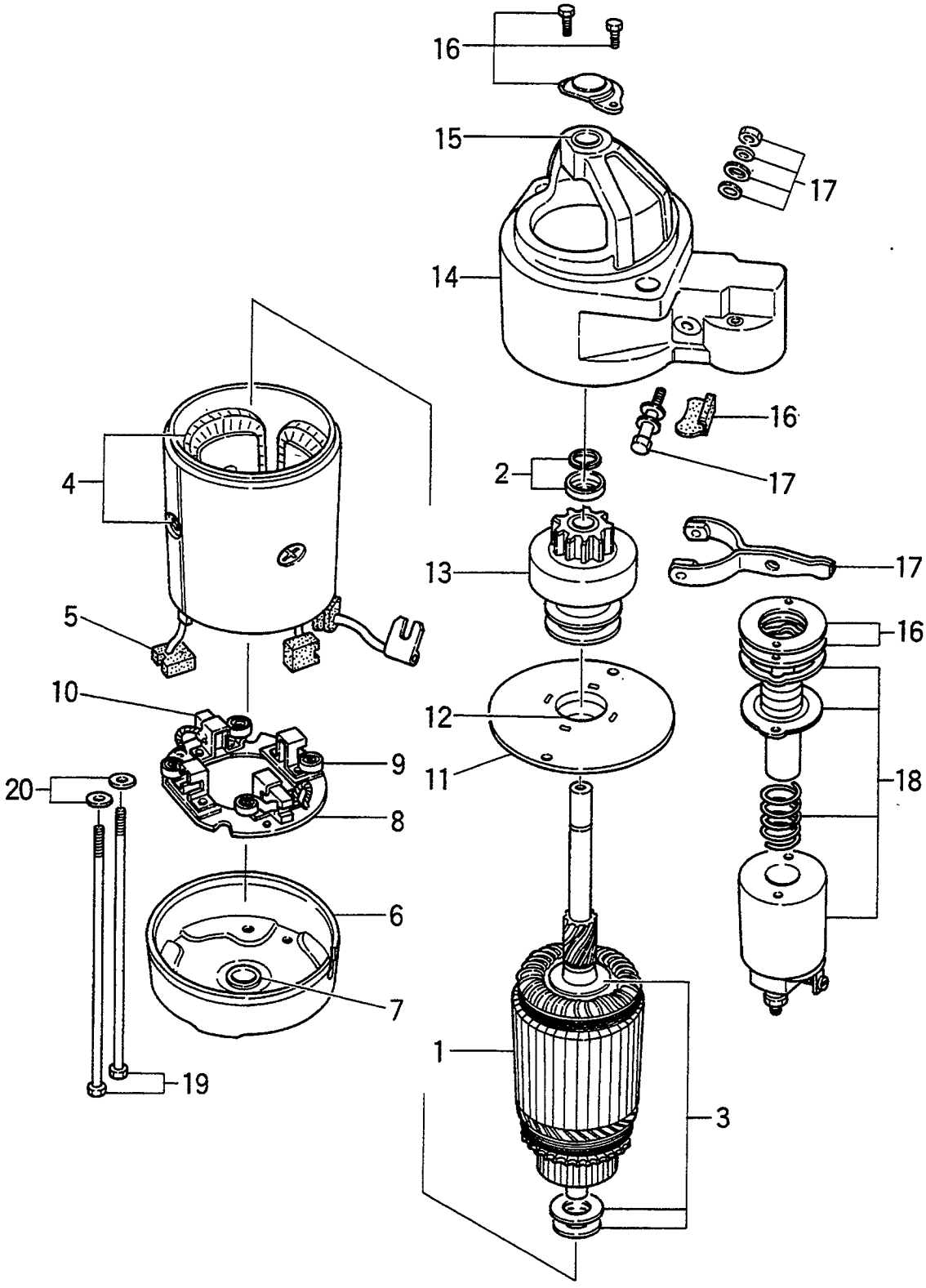

FIG. 30

A: C240PKJ D: C240PKJ-12
B: C240PKJ-06 E: C240PKJ-17
C: C240PKJ-11 F: C240PKJ-20

Item No. 見出番号	Part No. 部品番号	Mark 記号	Description 部品名称		Req'd 個数	Remarks : serial No. 備考：実施号車
A	Z-5-81100-129-2		STARTER ASSY	ｽﾀｰﾀｱｯｾﾝ	1	D
						INC.1-20
1	Z-5-81121-040-0		ARMATURE	ｱｰﾏﾁｭｱ	1	D
2	Z-5-81124-001-0		STOPPER KIT	ｽﾄｯﾊﾟｷｯﾄ	1	D
3	Z-5-81129-003-0		THRUST WASHER KIT	ｽﾗｽﾄﾜｯｼｬｷｯﾄ	1	D
4	Z-5-81112-031-0		COIL,FIELD	ｺｲﾙ	1	D
						INC.5
5	Z-5-81119-001-0		BRUSH, (+)	ﾌﾞﾗｼ	2	D
6	Z-5-81115-054-0		COVER,REAR	ｶﾊﾞｰ	1	D
						INC.7
7	Z-5-81119-012-0		METAL,REAR	ﾒﾀﾙ	1	D
8	Z-5-81118-002-0		HOLDER,BRUSH	ﾎﾙﾀﾞ	1	D
						INC.9,10
9	Z-5-81117-021-0		SPRING,BRUSH	ｽﾌﾟﾘﾝｸﾞ	4	D
10	Z-5-81119-001-0		BRUSH, (-)	ﾌﾞﾗｼ	2	D
11	Z-5-81119-013-0		METAL	ﾒﾀﾙ	1	D
						INC.12
12	Z-9-8211-2134-0		BUSHING	ﾌﾞｯｼﾝｸﾞ	1	D
13	Z-5-81123-028-0		PINION,CLUTCH	ﾋﾟﾆｵﾝ	1	D
14	Z-5-81113-057-0		CASE,GEAR	ｹｰｽ	1	D
						INC.15
15	Z-5-81119-012-0		METAL,FRONT	ﾒﾀﾙ	1	D
16	Z-5-81129-068-0		COVER SET	ｶﾊﾞｰｾｯﾄ	1	D
17	Z-5-81127-013-0		LEVER SET	ﾚﾊﾞｰｾｯﾄ	1	D
18	Z-5-81151-058-1		SWITCH,MAGNETIC	ｽｲｯﾁ	1	D
19	Z-5-81129-006-0		BOLT	ﾎﾞﾙﾄ	2	D
20	Z-5-81129-073-0		WASHER	ﾜｯｼｬ	2	D

FIG. 31 GENERATOR (INNER PARTS)(A,C,D,E,F)
ｼﾞｪﾈﾚｰﾀ(ｲﾝﾅﾊﾟｰﾂ)

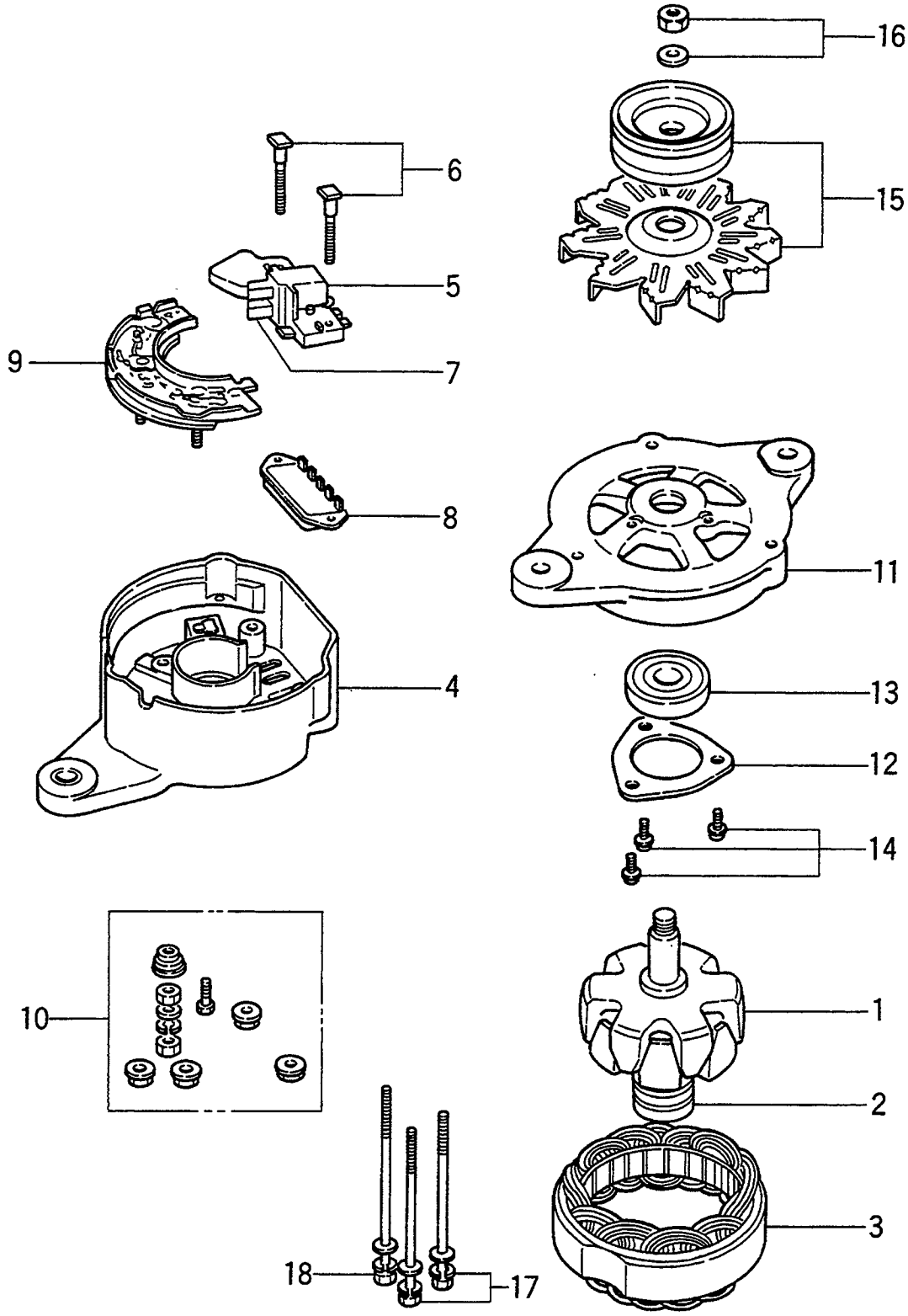

FIG. 31

A: C240PKJ D: C240PKJ-12
B: C240PKJ-06 E: C240PKJ-17
C: C240PKJ-11 F: C240PKJ-20

Item No. 見出番号	Part No. 部品番号	Mark 記号	Description 部品名称		Req'd 個数	Remarks : serial No. 備考：実施号車
A1	Z-5-81200-341-1		ALTERNATOR ASSY	ｵﾙﾀﾈｰﾀｱｯｾﾝ	1	A,C,E,F INC.1-18
-	Z-5-81200-335-0		ALTERNATOR ASSY	ｵﾙﾀﾈｰﾀｱｯｾﾝ	1	D INC.1-18
1	Z-5-81221-063-0		ROTOR	ﾛｰﾀ	1	A,C,E,F INC.2
-	Z-5-81221-065-0		ROTOR	ﾛｰﾀ	1	D INC.2
2	Z-9-00090-181-0		BEARING	ﾍﾞｱﾘﾝｸﾞ	1	A,C,D,E,F
3	Z-5-81211-058-0		STATOR	ｽﾃｰﾀ	1	A,C,E,F
-	Z-5-81211-060-0		STATOR	ｽﾃｰﾀ	1	D
A2	Z-8-94165-893-0		REAR COVER ASSY	ﾘﾔｶﾊﾞｰｱｯｾﾝ	1	A,C,E,F INC.4-10
-	Z-5-81214-123-0		REAR COVER ASSY	ﾘﾔｶﾊﾞｰｱｯｾﾝ	1	D INC.4-10
4	Z-8-94165-894-0		COVER,REAR	ｶﾊﾞｰ	1	A,C,E,F
-	Z-5-81214-124-0		COVER,REAR	ｶﾊﾞｰ	1	D
A3	Z-5-81219-036-0		REGULATOR ASSY	ﾚｷﾞｭﾚｰﾀｱｯｾﾝ	1	A,C,E,F INC.5-8
-	Z-5-81219-033-0		REGULATOR ASSY	ﾚｷﾞｭﾚｰﾀｱｯｾﾝ	1	D INC.5-8
5	Z-5-81215-046-0		BRUSH	ﾌﾞﾗｼ	1	A,C,D,E,F INC.7
6	Z-5-81229-166-0		BOLT	ﾎﾞﾙﾄ	2	A,C,D,E,F
7	Z-5-81215-040-0		BRUSH	ﾌﾞﾗｼ	2	A,C,D,E,F
8	Z-5-81270-004-0		REGULATOR	ﾚｷﾞｭﾚｰﾀ	1	A,C,E,F
-	Z-5-81251-016-0		REGULATOR	ﾚｷﾞｭﾚｰﾀ	1	D
9	Z-5-81262-005-0		HOLDER	ﾎﾙﾀﾞ	1	A,C,D,E,F
10	NO PART NO.		BOLT&NUT KIT	ﾎﾞﾙﾄ&ﾅｯﾄｷｯﾄ	1	A,C,D,E,F
11	Z-5-81213-052-0		COVER,FRONT	ｶﾊﾞｰ	1	A,C,E,F INC.12-14
-	Z-5-81213-043-0		COVER,FRONT	ｶﾊﾞｰ	1	D INC.12-14
12	Z-5-81229-029-0		RETAINER	ﾘﾃｰﾅ	1	A,C,D,E,F
13	Z-5-09800-087-0		BEARING	ﾍﾞｱﾘﾝｸﾞ	1	A,C,D,E,F
14	Z-5-81229-165-0		SCREW KIT	ｽｸﾘｭｷｯﾄ	1	A,C,D,E,F
15	Z-5-81222-076-0		PULLEY,FAN	ﾌﾟｰﾘ	1	A,C,E,F
-	Z-5-81222-085-0		PULLEY,FAN	ﾌﾟｰﾘ	1	D
16	Z-9-8223-5015-0		NUT	ﾅｯﾄ	1	A,C,D,E,F
17	Z-5-81229-182-0		BOLT	ﾎﾞﾙﾄ	2	A,C,E,F
-	Z-5-81219-189-0		BOLT	ﾎﾞﾙﾄ	2	D
18	Z-5-81229-183-0		BOLT	ﾎﾞﾙﾄ	1	A,C,E,F
-	Z-5-81219-190-0		BOLT	ﾎﾞﾙﾄ	1	D

FIG. 32 GENERATOR (INNER PARTS)(B)
ｼﾞｪﾈﾚｰﾀ(ｲﾝﾅﾊﾟｰﾂ)

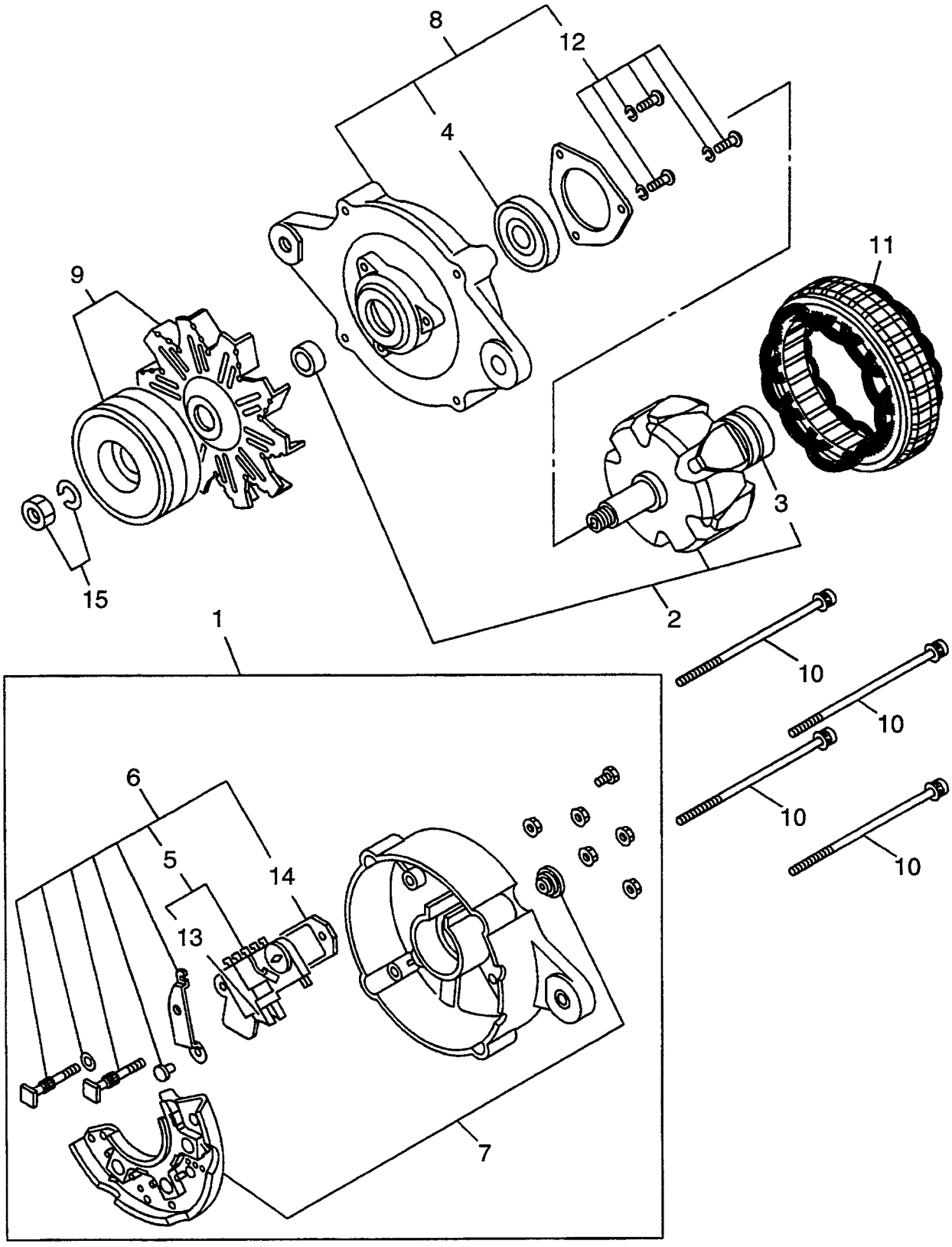

FIG. 32

A: C240PKJ D: C240PKJ-12
B: C240PKJ-06 E: C240PKJ-17
C: C240PKJ-11 F: C240PKJ-20

Item No. 見出番号	Part No. 部品番号	Mark 記号	Description 部品名称		Req'd 個数	Remarks : serial No. 備考：実施号車
A1	53652-60112		GENERATOR ASSY	ｼﾞｪﾈﾚｰﾀｱｯｾﾝ	1	B
						INC.1-15
1	Z-8-97104-360-0		COVER	ｶﾊﾞｰ	1	B
						INC.5-7,13,14
2	Z-8-97104-358-0		ROTOR	ﾛｰﾀ		B
						INC.3
3	Z-8-94458-424-0		BEARING	ﾍﾞｱﾘﾝｸﾞ	1	B
4	Z-8-94458-423-0		BEARING	ﾍﾞｱﾘﾝｸﾞ	1	B
5	Z-8-94361-720-0		HOLDER,BRUSH	ﾎﾙﾀﾞ	1	B
6	Z-8-94361-719-0		REGULATOR	ﾚｷﾞｭﾚｰﾀ	1	B
						INC.5,13,14
7	Z-8-97104-361-0		RECTIFIER	ﾚｸﾃｨﾌｧｲｱ	1	B
8	Z-8-97104-362-0		COVER	ｶﾊﾞｰ	1	B
						INC.4,12
9	Z-8-97104-363-0		PULLEY	ﾌﾟｰﾘ	1	B
10	Z-8-94116-435-0		BOLT	ﾎﾞﾙﾄ	4	B
11	Z-8-97104-359-0		STATOR	ｽﾃｰﾀ	1	B
12	Z-8-94233-653-0		SCREW SET	ｽｸﾘｭｾｯﾄ	1	B
13	Z-8-94361-721-0		BRUSH	ﾌﾞﾗｼ	2	B
14	Z-8-94361-722-0		REGAULATOR	ﾚｷﾞｭﾚｰﾀ	1	B
15	Z-8-94156-601-0		NUT SET	ﾅｯﾄｾｯﾄ	1	B

PARTS NUMBER INDEX 部品番号索引表

PART No. 部品番号	FIG.NO. 図番号	PART No. 部品番号	FIG.NO. 図番号	PART No. 部品番号	FIG.NO. 図番号	PART No. 部品番号	FIG.NO. 図番号
Z-0-0125-4300-0	16	Z-1-09044-075-1	9	Z-5-09675-018-1	14	Z-5-12561-011-0	7
Z-0-1081-0850-0	7	Z-1-09600-005-1	1	Z-5-09675-022-0	14	Z-5-12562-007-0	7
Z-0-2080-0612-0	15	Z-1-09600-005-1	6	Z-5-09675-032-1	14	Z-5-12565-004-0	7
Z-0-2080-0614-0	17	Z-1-09623-013-0	21	Z-5-09800-032-0	3	Z-5-12575-016-0	7
Z-0-2080-0812-0	12	Z-1-09623-016-0	23	Z-5-09800-038-0	21	Z-5-12611-020-1	7
Z-0-2080-1014-0	14	Z-1-09623-016-0	23	Z-5-09800-038-0	21	Z-5-12611-022-1	7
Z-0-2808-0610-0	9	Z-1-09630-082-0	14	Z-5-09800-087-0	31	Z-5-13100-126-3	12
Z-0-2808-0612-0	27	Z-1-09675-037-1	14	Z-5-09814-001-0	15	Z-5-13141-014-0	12
Z-0-2808-0620-0	14	Z-1-09675-139-0	18	Z-5-11110-207-0	6	Z-5-13212-075-1	25
Z-0-2808-0810-0	14	Z-1-15619-003-0	21	Z-5-11129-006-0	1	Z-5-13311-114-1	14
Z-0-2808-0812-0	16	Z-1-15619-024-0	21	Z-5-11129-006-0	6	Z-5-13311-174-0	14
Z-0-2808-0816-0	1	Z-1-15619-024-0	21	Z-5-11150-108-0	6	Z-5-13311-222-1	14
Z-0-2808-0820-0	1	Z-1-15619-082-0	21	Z-5-11170-240-1	6	Z-5-13641-043-4	15
Z-0-2808-0820-0	15	Z-1-15619-082-0	23	Z-5-11179-046-0	6	Z-5-13641-045-3	15
Z-0-2808-0820-0	15	Z-1-15622-003-0	21	Z-5-11179-052-0	6	Z-5-13642-064-0	15
Z-0-2808-0825-0	3	Z-1-15629-001-0	21	Z-5-11210-177-4	1	Z-5-13713-030-0	15
Z-0-2808-0830-0	4	Z-1-15629-090-0	21	Z-5-11219-008-0	1	Z-5-13716-019-0	15
Z-0-2808-0845-0	3	Z-1-15629-090-0	21	Z-5-11219-008-0	6	Z-5-13719-047-0	15
Z-0-2808-0845-0	16	Z-1-15639-003-0	21	Z-5-11219-015-0	1	Z-5-13770-021-1	15
Z-0-2808-0845-0	17	Z-1-15639-088-0	21	Z-5-11219-017-0	1	Z-5-14111-073-2	8
Z-0-2808-1050-0	15	Z-1-15639-088-0	21	Z-5-11219-018-0	1	Z-5-14111-073-2	9
Z-0-2808-1090-0	3	Z-1-15729-006-0	20	Z-5-11311-046-1	1	Z-5-14310-360-1	9
Z-0-2808-1230-0	5	Z-1-15729-006-0	20	Z-5-11311-047-0	3	Z-5-14310-360-1	11
Z-0-2868-0820-0	1	Z-1-15729-006-0	20	Z-5-11321-009-0	3	Z-5-14313-023-0	11
Z-0-2868-0820-0	1	Z-1-15729-085-0	22	Z-5-11321-036-0	3	Z-5-14314-025-1	10
Z-0-2868-0820-0	15	Z-1-15729-086-0	22	Z-5-11321-038-0	3	Z-5-14319-083-1	10
Z-0-2868-0820-0	15	Z-1-15729-087-0	22	Z-5-11321-091-0	3	Z-5-14319-084-0	10
Z-0-2868-0825-0	4	Z-1-15729-089-0	22	Z-5-11322-018-0	3	Z-5-14319-134-0	9
Z-0-2868-0825-0	27	Z-1-15729-090-0	22	Z-5-11322-019-0	3	Z-5-14319-319-0	9
Z-0-2868-0830-0	13	Z-1-15729-091-0	22	Z-5-11341-104-3	5	Z-5-14319-330-0	11
Z-0-2868-0830-0	15	Z-1-15759-001-0	21	Z-5-11360-072-2	4	Z-5-14331-003-0	11
Z-0-2868-0840-0	27	Z-1-15759-001-0	23	Z-5-11631-008-0	1	Z-5-14331-004-1	10
Z-0-2868-1020-0	27	Z-1-15759-002-0	23	Z-5-11631-009-0	1	Z-5-14334-036-0	9
Z-0-2868-1025-0	27	Z-1-15759-003-0	23	Z-5-11633-001-0	1	Z-5-14335-006-0	17
Z-0-2868-1035-0	25	Z-1-81900-234-0	27	Z-5-11641-008-0	1	Z-5-15300-039-1	16
Z-0-2868-1240-0	27	Z-1-81910-052-0	27	Z-5-11641-009-0	1	Z-5-15300-039-1	17
Z-0-2869-0820-0	25	Z-1-82410-008-2	27	Z-5-11643-001-0	1	Z-5-15300-039-1	18
Z-0-2869-0820-0	25	Z-1-82450-018-0	27	Z-5-11711-026-0	6	Z-5-15311-006-0	18
Z-0-5004-0612-0	3	Z-1-83539-044-0	22	Z-5-11715-023-0	6	Z-5-15334-003-0	18
Z-0-5004-0612-0	9	Z-5-09000-069-0	7	Z-5-11740-021-2	1	Z-5-15341-002-0	18
Z-0-5004-0612-0	14	Z-5-09000-096-1	6	Z-5-11760-147-0	4	Z-5-15343-002-0	18
Z-0-5004-0616-0	4	Z-5-09000-227-0	5	Z-5-11771-130-1	1	Z-5-15411-092-0	17
Z-0-5004-0816-0	3	Z-5-09030-024-1	15	Z-5-11777-054-0	6	Z-5-15411-216-1	17
Z-0-5004-0816-0	7	Z-5-09030-031-0	12	Z-5-12211-017-0	2	Z-5-15411-217-1	17
Z-0-5004-0820-0	15	Z-5-09360-130-1	8	Z-5-12230-039-1	2	Z-5-15411-218-1	17
Z-0-5004-0822-0	1	Z-5-09361-167-0	15	Z-5-12235-009-0	2	Z-5-15411-219-2	17
Z-0-5004-0822-0	15	Z-5-09366-036-0	1	Z-5-12251-005-0	2	Z-5-15411-223-1	17
Z-0-5004-0822-0	27	Z-5-09409-016-0	2	Z-5-12330-116-1	2	Z-5-15411-774-0	17
Z-0-5004-0825-1	12	Z-5-09503-082-0	7	Z-5-12336-010-1	2	Z-5-15419-007-0	17
Z-0-5004-0832-0	27	Z-5-09585-015-0	10	Z-5-12511-078-4	7	Z-5-15419-013-1	16
Z-0-5004-1022-0	1	Z-5-09585-041-0	10	Z-5-12519-002-1	7	Z-5-15543-002-0	27
Z-0-5004-1025-0	5	Z-5-09587-001-0	2	Z-5-12521-025-0	2	Z-5-15611-044-0	21
Z-0-5004-1028-0	1	Z-5-09600-013-0	1	Z-5-12523-023-1	7	Z-5-15612-012-0	21
Z-0-5004-1060-0	15	Z-5-09600-013-0	6	Z-5-12524-066-0	20	Z-5-15619-001-0	21
Z-0-5004-1230-0	5	Z-5-09605-005-0	6	Z-5-12524-066-0	20	Z-5-15619-002-0	21
Z-0-5014-0825-0	12	Z-5-09605-005-0	15	Z-5-12524-066-0	20	Z-5-15619-003-0	21
Z-1-09044-073-0	16	Z-5-09605-005-0	15	Z-5-12524-067-0	17	Z-5-15619-004-0	21
Z-1-09044-073-0	17	Z-5-09605-019-2	1	Z-5-12525-014-2	3	Z-5-15619-005-0	21
Z-1-09044-075-1	4	Z-5-09605-019-2	1	Z-5-12533-013-0	3	Z-5-15619-007-0	21
Z-1-09044-075-1	8	Z-5-09625-079-0	3	Z-5-12535-005-1	7	Z-5-15619-008-0	21

PARTS NUMBER INDEX 部品番号索引表

PART No. 部品番号	FIG.NO. 図番号	PART No. 部品番号	FIG.NO. 図番号	PART No. 部品番号	FIG.NO. 図番号	PART No. 部品番号	FIG.NO. 図番号
Z-5-15619-009-0	21	Z-5-15722-002-0	22	Z-5-81229-165-0	31	Z-8-94111-660-0	19
Z-5-15619-010-0	21	Z-5-15729-000-1	22	Z-5-81229-166-0	31	Z-8-94111-661-0	19
Z-5-15619-011-0	21	Z-5-15729-027-0	22	Z-5-81229-182-0	31	Z-8-94111-662-0	19
Z-5-15619-012-0	21	Z-5-15729-034-0	22	Z-5-81229-183-0	31	Z-8-94111-663-0	19
Z-5-15619-013-0	21	Z-5-15729-098-0	22	Z-5-81251-016-0	31	Z-8-94111-664-0	19
Z-5-15619-015-0	21	Z-5-15729-099-0	22	Z-5-81262-005-0	31	Z-8-94111-665-0	19
Z-5-15619-025-0	21	Z-5-15729-187-0	22	Z-5-81270-004-0	31	Z-8-94111-750-1	1
Z-5-15619-026-0	21	Z-5-15751-012-0	23	Z-5-82410-012-2	27	Z-8-94114-515-0	18
Z-5-15619-027-0	21	Z-5-15754-001-0	23	Z-5-82650-093-0	27	Z-8-94114-727-0	15
Z-5-15619-034-0	21	Z-5-15759-027-0	23	Z-5-83539-024-0	19	Z-8-94116-435-0	32
Z-5-15619-035-0	21	Z-5-15781-002-0	17	Z-5-87811-339-1	1	Z-8-94121-620-0	19
Z-5-15619-036-0	21	Z-5-15789-021-0	17	Z-5-87811-339-1	3	Z-8-94128-928-0	22
Z-5-15619-037-0	21	Z-5-19360-320-0	9	Z-5-87811-339-1	4	Z-8-94131-130-0	23
Z-5-15619-039-0	21	Z-5-19711-094-1	27	Z-5-87811-339-1	6	Z-8-94132-674-0	24
Z-5-15619-039-0	21	Z-5-19781-007-0	27	Z-5-87811-339-1	7	Z-8-94132-674-0	26
Z-5-15619-041-0	21	Z-5-81100-129-2	27	Z-5-87811-339-1	8	Z-8-94132-675-0	24
Z-5-15619-047-0	17	Z-5-81100-129-2	30	Z-5-87811-339-1	13	Z-8-94132-675-0	26
Z-5-15619-049-0	22	Z-5-81112-031-0	30	Z-5-87811-339-1	14	Z-8-94132-742-0	22
Z-5-15619-078-0	22	Z-5-81113-057-0	30	Z-5-87811-339-1	15	Z-8-94132-785-0	20
Z-5-15619-106-0	21	Z-5-81115-054-0	30	Z-5-87811-339-1	16	Z-8-94134-780-1	9
Z-5-15619-107-0	21	Z-5-81117-021-0	30	Z-5-87811-341-1	1	Z-8-94136-702-0	9
Z-5-15619-108-0	21	Z-5-81118-002-0	30	Z-5-87811-341-1	3	Z-8-94139-669-0	2
Z-5-15619-109-0	21	Z-5-81119-001-0	30	Z-5-87811-341-1	4	Z-8-94139-845-1	8
Z-5-15619-110-0	21	Z-5-81119-001-0	30	Z-5-87811-341-1	6	Z-8-94139-845-1	9
Z-5-15619-136-0	21	Z-5-81119-012-0	30	Z-5-87811-341-1	7	Z-8-94142-208-0	2
Z-5-15619-156-0	21	Z-5-81119-012-0	30	Z-5-87811-341-1	8	Z-8-94144-558-0	21
Z-5-15621-017-0	21	Z-5-81119-013-0	30	Z-5-87811-341-1	9	Z-8-94144-558-0	21
Z-5-15625-001-0	21	Z-5-81119-029-0	28	Z-5-87811-341-1	13	Z-8-94147-424-3	5
Z-5-15629-015-0	21	Z-5-81121-040-0	30	Z-5-87811-341-1	14	Z-8-94148-747-0	22
Z-5-15629-015-0	21	Z-5-81123-028-0	30	Z-5-87811-341-1	15	Z-8-94148-750-0	22
Z-5-15629-016-0	21	Z-5-81124-001-0	30	Z-5-87811-341-1	16	Z-8-94148-751-0	22
Z-5-15629-016-0	21	Z-5-81127-013-0	30	Z-5-87811-341-1	17	Z-8-94151-745-1	25
Z-5-15629-017-0	21	Z-5-81129-003-0	30	Z-5-87812-644-1	1	Z-8-94152-283-1	7
Z-5-15629-017-0	21	Z-5-81129-006-0	30	Z-5-87812-644-1	3	Z-8-94155-815-2	1
Z-5-15629-018-0	21	Z-5-81129-068-0	30	Z-5-87812-644-1	4	Z-8-94156-601-0	32
Z-5-15629-018-0	21	Z-5-81129-073-0	30	Z-5-87812-644-1	6	Z-8-94163-174-0	2
Z-5-15629-019-0	21	Z-5-81129-092-0	28	Z-5-87812-644-1	7	Z-8-94163-175-0	2
Z-5-15629-019-0	21	Z-5-81129-099-0	28	Z-5-87812-644-1	8	Z-8-94165-893-0	31
Z-5-15629-020-0	21	Z-5-81151-058-1	30	Z-5-87812-644-1	13	Z-8-94165-894-0	31
Z-5-15629-020-0	21	Z-5-81200-335-0	27	Z-5-87812-644-1	14	Z-8-94167-882-0	13
Z-5-15629-021-0	21	Z-5-81200-335-0	31	Z-5-87812-644-1	15	Z-8-94167-883-0	13
Z-5-15629-038-0	21	Z-5-81200-341-1	27	Z-5-87812-644-1	16	Z-8-94167-884-0	13
Z-5-15629-038-0	21	Z-5-81200-341-1	31	Z-5-87813-019-1	6	Z-8-94167-885-0	13
Z-5-15629-039-0	21	Z-5-81211-058-0	31	Z-5-87813-019-1	7	Z-8-94167-886-0	13
Z-5-15631-009-0	21	Z-5-81211-060-0	31	Z-5-87813-019-1	8	Z-8-94169-528-0	19
Z-5-15637-005-0	21	Z-5-81213-043-0	31	Z-5-87813-019-1	9	Z-8-94170-214-0	28
Z-5-15639-002-0	17	Z-5-81213-052-0	31	Z-5-87813-019-1	15	Z-8-94171-109-0	21
Z-5-15643-002-0	21	Z-5-81214-123-0	31	Z-5-87813-019-1	16	Z-8-94171-185-0	23
Z-5-15643-009-0	21	Z-5-81214-124-0	31	Z-5-87813-019-1	17	Z-8-94174-824-0	20
Z-5-15644-005-0	21	Z-5-81215-040-0	31	Z-5-87813-280-0	1	Z-8-94174-828-0	20
Z-5-15712-013-0	22	Z-5-81215-046-0	31	Z-5-87813-280-0	2	Z-8-94178-843-0	17
Z-5-15712-013-0	22	Z-5-81219-033-0	31	Z-5-87813-281-0	1	Z-8-94178-843-0	23
Z-5-15713-010-0	22	Z-5-81219-036-0	31	Z-5-87813-281-0	2	Z-8-94221-411-0	21
Z-5-15717-006-0	22	Z-5-81219-189-0	31	Z-5-87813-282-0	1	Z-8-94226-554-0	20
Z-5-15719-010-0	22	Z-5-81219-190-0	31	Z-5-87813-282-0	2	Z-8-94226-565-0	20
Z-5-15719-011-0	22	Z-5-81221-063-0	31	Z-8-94100-291-0	7	Z-8-94227-337-1	20
Z-5-15719-014-0	22	Z-5-81221-065-0	31	Z-8-94109-763-0	28	Z-8-94227-337-1	20
Z-5-15719-019-0	22	Z-5-81222-076-0	31	Z-8-94110-560-0	15	Z-8-94227-337-1	20
Z-5-15719-020-0	22	Z-5-81222-085-0	31	Z-8-94111-658-0	19	Z-8-94227-477-0	19
Z-5-15719-023-0	22	Z-5-81229-029-0	31	Z-8-94111-659-0	19	Z-8-94227-478-0	19

PARTS NUMBER INDEX 部品番号索引表

PART No. 部品番号	FIG.NO. 図番号	PART No. 部品番号	FIG.NO. 図番号	PART No. 部品番号	FIG.NO. 図番号	PART No. 部品番号	FIG.NO. 図番号
Z-8-94227-479-0	19	Z-8-94227-557-0	19	Z-8-94231-126-0	20	Z-8-94368-234-0	17
Z-8-94227-480-0	19	Z-8-94227-558-0	19	Z-8-94233-653-0	32	Z-8-94371-052-0	20
Z-8-94227-483-0	19	Z-8-94227-559-0	19	Z-8-94238-610-0	16	Z-8-94371-052-0	20
Z-8-94227-484-0	19	Z-8-94227-560-0	19	Z-8-94239-373-0	19	Z-8-94376-863-0	15
Z-8-94227-486-0	19	Z-8-94227-561-0	19	Z-8-94242-275-0	19	Z-8-94377-238-0	28
Z-8-94227-487-0	19	Z-8-94227-562-0	19	Z-8-94242-284-0	20	Z-8-94377-239-0	28
Z-8-94227-488-0	19	Z-8-94227-563-0	19	Z-8-94242-967-0	19	Z-8-94377-240-0	28
Z-8-94227-489-0	19	Z-8-94227-564-0	19	Z-8-94243-252-0	20	Z-8-94377-245-0	28
Z-8-94227-491-0	19	Z-8-94227-565-0	19	Z-8-94247-355-1	6	Z-8-94377-246-0	28
Z-8-94227-491-0	19	Z-8-94227-566-0	19	Z-8-94247-716-0	19	Z-8-94377-355-0	15
Z-8-94227-493-0	19	Z-8-94227-567-0	19	Z-8-94248-002-0	20	Z-8-94386-596-0	21
Z-8-94227-495-0	19	Z-8-94227-568-0	19	Z-8-94249-955-0	20	Z-8-94402-498-0	27
Z-8-94227-495-0	19	Z-8-94227-569-0	19	Z-8-94250-310-0	16	Z-8-94402-626-0	17
Z-8-94227-496-0	19	Z-8-94227-570-0	19	Z-8-94250-514-0	1	Z-8-94402-627-0	17
Z-8-94227-497-0	19	Z-8-94227-571-0	19	Z-8-94257-670-0	19	Z-8-94404-350-0	15
Z-8-94227-498-0	19	Z-8-94227-572-0	19	Z-8-94277-481-0	19	Z-8-94408-517-0	20
Z-8-94227-499-0	19	Z-8-94227-573-0	19	Z-8-94311-600-0	15	Z-8-94408-537-0	20
Z-8-94227-514-0	19	Z-8-94227-574-0	19	Z-8-94311-814-0	15	Z-8-94408-542-0	20
Z-8-94227-515-0	19	Z-8-94227-575-0	19	Z-8-94313-276-0	19	Z-8-94419-533-1	26
Z-8-94227-516-1	19	Z-8-94227-576-0	19	Z-8-94313-276-0	19	Z-8-94422-326-0	15
Z-8-94227-517-0	19	Z-8-94227-577-0	19	Z-8-94313-442-0	26	Z-8-94425-298-0	13
Z-8-94227-518-0	19	Z-8-94227-578-0	19	Z-8-94313-443-0	26	Z-8-94426-047-1	20
Z-8-94227-519-0	19	Z-8-94227-581-0	19	Z-8-94315-495-0	1	Z-8-94426-049-0	20
Z-8-94227-520-0	19	Z-8-94227-582-0	19	Z-8-94316-262-0	20	Z-8-94426-049-0	20
Z-8-94227-521-0	19	Z-8-94227-585-0	20	Z-8-94316-262-0	20	Z-8-94429-157-0	19
Z-8-94227-522-0	19	Z-8-94227-590-0	20	Z-8-94316-263-0	20	Z-8-94433-204-0	19
Z-8-94227-523-0	19	Z-8-94227-590-0	20	Z-8-94316-264-0	20	Z-8-94433-205-0	19
Z-8-94227-524-0	19	Z-8-94227-593-0	20	Z-8-94316-265-0	20	Z-8-94433-206-0	19
Z-8-94227-525-0	19	Z-8-94227-598-0	20	Z-8-94316-266-0	20	Z-8-94433-207-0	19
Z-8-94227-525-0	19	Z-8-94227-601-0	19	Z-8-94316-274-0	20	Z-8-94433-208-0	19
Z-8-94227-527-0	19	Z-8-94227-602-0	19	Z-8-94316-274-0	20	Z-8-94433-209-0	19
Z-8-94227-528-0	19	Z-8-94227-602-0	19	Z-8-94316-275-0	20	Z-8-94433-214-0	20
Z-8-94227-529-0	19	Z-8-94227-606-0	20	Z-8-94316-275-0	20	Z-8-94433-215-0	20
Z-8-94227-530-0	19	Z-8-94227-607-0	20	Z-8-94316-276-0	20	Z-8-94433-216-0	20
Z-8-94227-531-0	19	Z-8-94227-608-0	20	Z-8-94316-276-0	20	Z-8-94433-217-0	20
Z-8-94227-532-0	19	Z-8-94227-609-0	20	Z-8-94316-277-0	20	Z-8-94433-760-0	19
Z-8-94227-533-0	19	Z-8-94227-610-0	20	Z-8-94316-277-0	20	Z-8-94433-811-0	19
Z-8-94227-534-0	19	Z-8-94227-611-0	20	Z-8-94316-669-0	19	Z-8-94447-570-0	6
Z-8-94227-535-0	19	Z-8-94227-612-0	20	Z-8-94321-171-0	19	Z-8-94453-344-0	1
Z-8-94227-536-0	19	Z-8-94227-613-0	20	Z-8-94323-746-0	9	Z-8-94453-520-0	2
Z-8-94227-537-0	19	Z-8-94227-636-0	20	Z-8-94323-746-0	10	Z-8-94454-852-0	14
Z-8-94227-538-0	19	Z-8-94227-637-0	19	Z-8-94324-735-0	22	Z-8-94458-423-0	32
Z-8-94227-539-0	19	Z-8-94227-638-0	19	Z-8-94328-604-0	19	Z-8-94458-424-0	32
Z-8-94227-540-0	19	Z-8-94227-639-0	19	Z-8-94328-607-0	20	Z-8-94460-298-0	19
Z-8-94227-541-0	19	Z-8-94227-640-0	20	Z-8-94328-610-0	19	Z-8-94460-301-0	20
Z-8-94227-542-0	19	Z-8-94227-641-0	20	Z-8-94328-610-0	19	Z-8-94460-302-0	20
Z-8-94227-543-0	19	Z-8-94227-642-0	20	Z-8-94329-622-0	13	Z-8-94462-137-1	13
Z-8-94227-544-0	19	Z-8-94227-643-0	20	Z-8-94331-551-0	20	Z-8-94470-548-2	4
Z-8-94227-545-0	19	Z-8-94227-644-0	20	Z-8-94334-855-0	3	Z-8-94470-550-2	14
Z-8-94227-546-0	19	Z-8-94227-647-0	19	Z-8-94336-242-0	4	Z-8-94470-553-0	15
Z-8-94227-547-0	19	Z-8-94227-662-0	20	Z-8-94336-944-0	20	Z-8-94470-556-1	16
Z-8-94227-548-0	19	Z-8-94227-671-0	20	Z-8-94343-340-0	19	Z-8-94470-557-1	16
Z-8-94227-549-0	19	Z-8-94228-403-0	20	Z-8-94361-719-0	32	Z-8-94470-558-2	16
Z-8-94227-550-0	19	Z-8-94228-403-0	20	Z-8-94361-720-0	32	Z-8-94470-559-2	16
Z-8-94227-551-0	19	Z-8-94228-545-0	19	Z-8-94361-721-0	32	Z-8-94470-582-0	19
Z-8-94227-552-0	19	Z-8-94228-545-0	20	Z-8-94361-722-0	32	Z-8-94471-442-0	2
Z-8-94227-553-0	19	Z-8-94229-164-0	19	Z-8-94365-674-2	15	Z-8-94473-120-0	19
Z-8-94227-554-0	19	Z-8-94231-123-0	20	Z-8-94367-292-2	24	Z-8-94473-128-0	19
Z-8-94227-555-0	19	Z-8-94231-124-0	20	Z-8-94367-293-3	24	Z-8-94473-129-0	20
Z-8-94227-556-0	19	Z-8-94231-125-0	20	Z-8-94367-294-0	24	Z-8-94473-135-0	19

PARTS NUMBER INDEX 部品番号索引表

PART No. 部品番号	FIG.NO. 図番号	PART No. 部品番号	FIG.NO. 図番号	PART No. 部品番号	FIG.NO. 図番号	PART No. 部品番号	FIG.NO. 図番号
Z-8-94475-688-0	29	Z-8-97120-307-0	6	Z-8-97163-172-0	19	Z-9-0815-1040-0	1
Z-8-94475-698-0	29	Z-8-97127-049-0	1	Z-8-97167-265-2	7	Z-9-0815-1228-0	5
Z-8-97015-515-1	4	Z-8-97128-469-1	8	Z-8-97172-048-0	29	Z-9-0816-1032-0	1
Z-8-97018-936-1	6	Z-8-97135-497-0	28	Z-8-97172-050-0	29	Z-9-0816-1220-0	2
Z-8-97042-262-1	2	Z-8-97136-413-0	20	Z-8-97172-052-0	29	Z-9-0911-0406-0	21
Z-8-97044-111-0	12	Z-8-97136-414-0	20	Z-8-97172-055-0	29	Z-9-0911-0506-0	10
Z-8-97045-322-0	4	Z-8-97136-683-1	16	Z-8-97172-056-0	29	Z-9-0911-0508-0	10
Z-8-97045-328-0	1	Z-8-97136-683-1	19	Z-8-97172-058-0	29	Z-9-0911-0508-0	27
Z-8-97062-238-0	20	Z-8-97136-683-1	19	Z-8-97175-264-0	2	Z-9-0911-1508-0	7
Z-8-97063-165-0	20	Z-8-97137-606-0	29	Z-8-97176-864-0	2	Z-9-0915-0506-0	21
Z-8-97063-166-0	20	Z-8-97142-903-0	28	Z-8-97176-865-0	2	Z-9-0915-0508-0	8
Z-8-97063-400-3	15	Z-8-97144-355-0	20	Z-8-97176-896-0	1	Z-9-0915-0508-0	9
Z-8-97065-984-1	2	Z-8-97144-356-0	20	Z-8-97176-897-0	1	Z-9-0915-0508-0	10
Z-8-97069-786-1	27	Z-8-97144-357-0	20	Z-8-97176-898-0	1	Z-9-0915-0508-0	11
Z-8-97078-649-0	28	Z-8-97144-358-0	20	Z-8-97176-899-0	1	Z-9-0915-0508-0	15
Z-8-97084-347-0	22	Z-8-97144-359-0	20	Z-8-97176-900-0	1	Z-9-0915-0508-0	15
Z-8-97086-292-0	8	Z-8-97144-360-0	20	Z-8-97176-901-0	1	Z-9-0915-0508-0	27
Z-8-97086-292-0	9	Z-8-97144-361-0	20	Z-8-97185-634-0	22	Z-9-0915-0508-0	27
Z-8-97086-292-0	9	Z-8-97144-362-0	20	Z-8-97185-635-0	17	Z-9-0915-0510-0	5
Z-8-97088-697-0	20	Z-8-97144-363-0	20	Z-8-97202-342-0	22	Z-9-0915-0510-0	14
Z-8-97104-358-0	32	Z-8-97144-364-0	20	Z-8-97210-917-0	29	Z-9-0915-0512-0	17
Z-8-97104-359-0	32	Z-8-97144-365-0	20	Z-8-97210-992-0	29	Z-9-0915-0512-0	27
Z-8-97104-360-0	32	Z-8-97144-366-0	20	Z-8-97210-994-0	29	Z-9-0915-0610-0	17
Z-8-97104-361-0	32	Z-8-97144-367-0	20	Z-8-97214-365-0	19	Z-9-0915-0808-0	7
Z-8-97104-362-0	32	Z-8-97144-368-0	20	Z-8-97214-479-0	20	Z-9-0916-0506-0	17
Z-8-97104-363-0	32	Z-8-97144-369-0	20	Z-8-97214-480-0	20	Z-9-0916-0506-0	27
Z-8-97109-380-0	27	Z-8-97144-370-0	20	Z-8-97214-481-0	20	Z-9-0916-0508-0	10
Z-8-97112-865-2	27	Z-8-97144-371-0	20	Z-8-97214-482-0	20	Z-9-0916-0508-0	27
Z-8-97112-865-2	28	Z-8-97144-372-0	20	Z-8-97214-488-0	20	Z-9-0916-0512-0	27
Z-8-97112-869-0	28	Z-8-97144-373-0	20	Z-8-97220-742-0	16	Z-9-0916-4008-0	7
Z-8-97112-870-0	28	Z-8-97144-374-0	20	Z-8-97220-742-0	19	Z-9-0916-4508-0	1
Z-8-97112-871-0	28	Z-8-97144-375-0	20	Z-8-97226-145-0	20	Z-9-0916-4508-0	25
Z-8-97112-872-0	28	Z-8-97144-376-0	20	Z-8-97229-471-0	15	Z-9-0916-4510-0	17
Z-8-97112-873-0	28	Z-8-97144-377-0	20	Z-8-97233-091-0	20	Z-9-0916-4608-0	8
Z-8-97112-875-0	28	Z-8-97144-378-0	20	Z-8-97233-092-0	19	Z-9-0916-4608-0	9
Z-8-97112-879-0	28	Z-8-97144-379-0	20	Z-8-97264-690-1	15	Z-9-0916-4708-0	27
Z-8-97112-880-0	28	Z-8-97144-380-0	20	Z-8-97311-976-0	14	Z-9-09160-510-0	3
Z-8-97112-881-0	28	Z-8-97144-381-0	20	Z-8-97365-690-0	1	Z-9-0918-0019-0	7
Z-8-97112-954-0	28	Z-8-97144-382-0	20	Z-9-00090-181-0	31	Z-9-0918-5412-0	11
Z-8-97112-957-0	28	Z-8-97144-383-0	20	Z-9-00090-677-0	21	Z-9-0952-5032-0	17
Z-8-97113-741-0	15	Z-8-97144-384-0	20	Z-9-00090-677-0	21	Z-9-0952-5536-0	16
Z-8-97113-742-0	1	Z-8-97144-385-0	20	Z-9-0190-0614-0	21	Z-9-0956-1353-0	20
Z-8-97113-743-0	3	Z-8-97144-386-0	20	Z-9-0190-0818-0	22	Z-9-0957-1106-0	15
Z-8-97113-744-0	8	Z-8-97144-387-0	20	Z-9-0190-0835-0	15	Z-9-0957-1316-0	4
Z-8-97113-744-0	9	Z-8-97144-388-0	20	Z-9-0191-0618-0	20	Z-9-0957-1316-0	15
Z-8-97113-745-0	16	Z-8-97144-389-0	20	Z-9-0191-0618-0	20	Z-9-0957-1408-0	17
Z-8-97113-745-0	17	Z-8-97144-390-0	20	Z-9-0410-1030-0	17	Z-9-0957-1408-0	18
Z-8-97116-483-0	29	Z-8-97144-391-0	20	Z-9-0411-0825-0	8	Z-9-0957-1414-0	1
Z-8-97116-484-0	29	Z-8-97145-323-0	29	Z-9-0411-0835-0	6	Z-9-0957-1416-0	4
Z-8-97116-485-0	29	Z-8-97145-324-0	29	Z-9-0411-0840-0	6	Z-9-0957-1416-0	4
Z-8-97116-489-0	29	Z-8-97145-325-0	29	Z-9-0411-0845-0	6	Z-9-0957-2008-0	14
Z-8-97116-490-0	29	Z-8-97145-612-0	14	Z-9-0411-0850-0	9	Z-9-0957-2008-0	14
Z-8-97116-491-0	29	Z-8-97146-139-0	19	Z-9-0441-1025-0	8	Z-9-0957-2010-0	21
Z-8-97116-495-0	29	Z-8-97146-140-0	19	Z-9-0441-1025-0	9	Z-9-0957-2012-0	5
Z-8-97116-515-0	29	Z-8-97146-141-0	19	Z-9-0602-3625-0	10	Z-9-0957-2014-0	17
Z-8-97118-698-0	3	Z-8-97146-142-0	19	Z-9-0652-0412-0	6	Z-9-0957-2014-0	25
Z-8-97119-187-0	20	Z-8-97147-034-0	20	Z-9-0800-0718-0	7	Z-9-09651-133-0	4
Z-8-97119-187-0	20	Z-8-97148-875-0	17	Z-9-0803-0743-0	2	Z-9-09651-134-0	4
Z-8-97119-344-0	20	Z-8-97148-875-0	21	Z-9-0811-1612-0	27	Z-9-09651-135-0	4
Z-8-97120-028-0	5	Z-8-97161-465-0	27	Z-9-0815-0616-0	2	Z-9-09651-136-0	4

PARTS NUMBER INDEX 部品番号索引表

PART No. 部品番号	FIG.NO. 図番号	PART No. 部品番号	FIG.NO. 図番号	PART No. 部品番号	FIG.NO. 図番号	PART No. 部品番号	FIG.NO. 図番号
Z-9-09651-137-0	4	Z-9-13614-043-0	15	Z-9-8131-5179-0	22	01400-10008	9
Z-9-09651-138-0	4	Z-9-13639-001-0	15	Z-9-8131-5181-0	22	01400-10008	9
Z-9-09651-139-0	4	Z-9-13642-076-1	15	Z-9-8131-5182-0	22	01400-10010	3
Z-9-09651-140-0	4	Z-9-14149-173-0	6	Z-9-8131-5184-0	22	01400-10010	5
Z-9-09651-141-0	4	Z-9-14319-023-0	10	Z-9-8131-5185-0	22	01402-00008	11
Z-9-09651-142-0	4	Z-9-14319-326-0	11	Z-9-8131-5190-0	22	01402-00008	27
Z-9-09651-143-0	4	Z-9-15315-026-0	16	Z-9-8131-5191-0	22	02010-00006	9
Z-9-09651-144-0	4	Z-9-15315-026-0	17	Z-9-8131-5191-0	22	02010-00006	10
Z-9-09651-145-0	4	Z-9-15315-027-0	16	Z-9-8131-5195-0	22	02010-00006	17
Z-9-09662-012-0	4	Z-9-15315-027-0	17	Z-9-8131-5207-0	22	02010-00006	20
Z-9-09664-001-0	1	Z-9-15315-028-0	16	Z-9-8131-5211-0	22	02010-00006	20
Z-9-09706-037-0	21	Z-9-15315-028-0	17	Z-9-8131-5228-0	22	02010-00010	3
Z-9-09802-591-0	1	Z-9-15315-074-0	16	Z-9-8131-5229-0	22	03000-06207	3
Z-9-09802-606-0	2	Z-9-15315-074-0	17	Z-9-8131-5230-0	22	03020-06302	2
Z-9-09851-931-0	7	Z-9-15332-603-0	18	Z-9-8131-5241-0	22	20801-0A071	27
Z-9-09860-522-0	6	Z-9-15339-056-0	18	Z-9-8131-6108-0	22	20801-0Z141	6
Z-9-09862-042-0	15	Z-9-15339-057-0	18	Z-9-8131-6109-0	22	20801-0Z151	7
Z-9-09878-597-0	1	Z-9-15339-601-0	18	Z-9-8131-6110-0	22	20801-0Z161	7
Z-9-09902-238-0	27	Z-9-15351-007-0	18	Z-9-8131-6111-0	22	20801-01271	13
Z-9-09902-260-0	22	Z-9-15352-005-0	18	Z-9-8131-6112-0	22	20801-02021	25
Z-9-09902-299-0	1	Z-9-15359-601-0	18	Z-9-8131-6122-0	22	20801-02131	26
Z-9-09906-314-1	17	Z-9-15419-072-1	17	Z-9-8131-6123-0	22	20801-02141	24
Z-9-09906-325-1	17	Z-9-19732-610-0	27	Z-9-8131-6126-0	22	20801-04081	15
Z-9-09914-909-0	9	Z-9-19751-079-0	17	Z-9-8131-6129-0	22	20801-04091	15
Z-9-09915-238-0	1	Z-9-19751-801-0	25	Z-9-8132-5086-0	22	20801-07131	2
Z-9-09915-644-2	15	Z-9-8121-5115-0	21	Z-9-81345-072-0	19	20801-07141	2
Z-9-09916-275-0	15	Z-9-8121-5144-0	21	Z-9-8135-1205-0	23	20801-07151	2
Z-9-09916-374-0	9	Z-9-8122-1223-0	21	Z-9-8135-1303-0	23	20801-08311	1
Z-9-09916-818-0	9	Z-9-8122-2220-0	21	Z-9-8135-1403-0	23	20802-42161	27
Z-9-09920-620-0	13	Z-9-8122-5033-0	21	Z-9-8135-1410-0	23	211L2-10031	15
Z-9-09921-099-0	1	Z-9-8122-5033-0	21	Z-9-8135-1602-0	23	22452-42021	27
Z-9-09940-607-0	7	Z-9-8122-5047-0	21	Z-9-8135-1702-0	23	225R2-40201	27
Z-9-09961-005-0	15	Z-9-8122-5047-0	21	Z-9-8135-5025-0	23	25952-42411	27
Z-9-11179-132-0	6	Z-9-8122-5057-0	21	Z-9-8135-5035-0	23	53652-60112	27
Z-9-11179-808-0	6	Z-9-8122-5058-0	21	Z-9-8139-1301-0	22	53652-60112	32
Z-9-11219-093-0	1	Z-9-8123-5003-0	21	Z-9-8139-1302-0	22	55593-62341	2
Z-9-11258-108-0	4	Z-9-8123-5015-0	21	Z-9-8139-1311-0	22	55593-62351	1
Z-9-11327-045-0	3	Z-9-8123-5017-0	21	Z-9-8211-2134-0	30	55593-62371	27
Z-9-11681-010-1	7	Z-9-8123-5021-0	21	Z-9-8223-5015-0	31	55593-62371	29
Z-9-11745-024-0	1	Z-9-8123-5042-0	21	Z-9-8253-0046-0	27		
Z-9-11751-038-1	6	Z-9-8123-5043-0	21	Z-9-8295-1322-0	27		
Z-9-11777-136-0	6	Z-9-8123-5044-0	21	Z-9-8841-0197-0	22		
Z-9-12333-605-1	2	Z-9-8123-5045-0	21	Z-9-8841-0198-0	22		
Z-9-12362-039-0	2	Z-9-8124-1103-0	21	Z-9-8841-0204-0	22		
Z-9-12363-112-1	1	Z-9-8124-5014-0	21	Z-9-8841-0205-0	22		
Z-9-12373-605-2	2	Z-9-8131-1158-0	22	Z-9-8841-0224-0	22		
Z-9-12379-016-0	2	Z-9-8131-1166-0	22	Z-9-8841-0257-0	22		
Z-9-12522-144-1	7	Z-9-8131-1415-0	22	Z-9-8841-0466-0	22		
Z-9-12531-024-1	7	Z-9-8131-1417-0	22	Z-9-89112-911-0	1		
Z-9-12559-008-0	7	Z-9-8131-1418-0	22	Z-9-9328-0308-0	11		
Z-9-12561-037-0	7	Z-9-8131-1524-0	22	Z-9-9349-0412-0	17		
Z-9-12571-801-1	7	Z-9-8131-1751-0	22	Z-9-9349-0416-0	11		
Z-9-12611-347-0	7	Z-9-8131-1752-0	22	Z-9-9441-1233-0	5		
Z-9-12611-349-0	7	Z-9-8131-3105-0	22	Z-9-9911-0412-0	27		
Z-9-12626-005-0	7	Z-9-8131-3502-0	22	Z-9-9911-1404-0	11		
Z-9-12628-093-0	7	Z-9-8131-5065-0	22	Z-9-9920-2314-0	1		
Z-9-13113-086-0	12	Z-9-8131-5094-0	22	Z-9-9920-2316-0	4		
Z-9-13143-603-1	12	Z-9-8131-5120-0	22	01106-08055	7		
Z-9-13226-009-0	13	Z-9-8131-5164-0	22	01400-10008	8		
Z-9-13260-056-2	25	Z-9-8131-5165-0	22	01400-10008	8		

No.PE-C240PKJ-1B

平成14年５月　　発行
平成15年３月　　改訂

TCM株式会社
本　社　　大阪市西区京町堀１－１５－１０

発　行　　ＴＣＭテクノ株式会社

ISSUED : May, 2002
ISSUED : March, 2003

TCM CORPORATION
INTERNATIONAL MARKETING DIVISION: 1-15-5, Nishi-shimbashi, Minato-ku, Tokyo
105-0003, Japan
FAX: Japan +81-3-35918152, 3-35918153

無断で転載・複製を禁ず
All rights reserved.

I-1503001(H) Printed in Japan

TCM株式会社